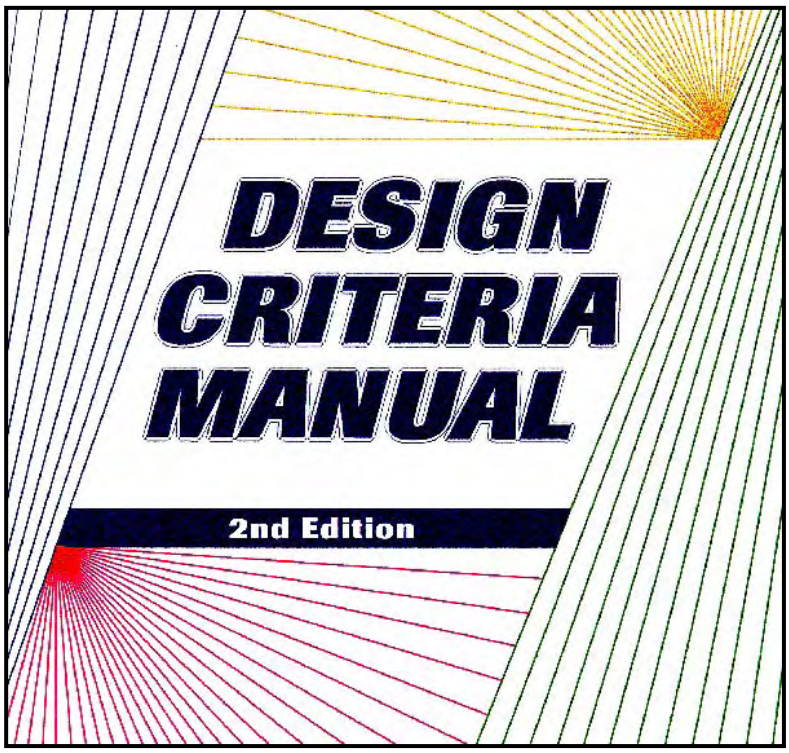

DEPARTMENT OF ENGINEERING
City of Newport News
Newport News, Virginia 23607
August 1997

This reprint, **issued December 2005**, incorporates the addenda items (see p. xxi) that have been published since the 2nd Edition of the manual was published in 1997.

sdg04106

RESOLUTION NO. 8912-97

A RESOLUTION APPROVING AND ADOPTING A *DESIGN CRITERIA MANUAL* FOR THE CITY OF NEWPORT NEWS, VIRGINIA.

WHEREAS, in 1984 a *Design Criteria Manual* was approved and published as a means to standardize and formalize design criteria to be used during City review of certain improvements to be constructed within the City; and

WHEREAS, the Department of Engineering has proposed major revisions to the *Design Criteria Manual* in order to reflect the experiences of working with the original manual, account for technological and legislative changes, and enhance the user's ability to easily translate *Design Criteria Manual* provisions into plans which may be approved by appropriate City personnel; and

WHEREAS, the City Manager recommends that the new *Design Criteria Manual* be adopted by the Council of the City of Newport News (the Council); and

WHEREAS, the Council, after careful review and study, concurs that the *Design Criteria Manual* should be approved and adopted as presented.

NOW, THEREFORE, BE IT RESOLVED by the Council of the City of Newport News, Virginia:

1. That the *Design Criteria Manual* presented to the Council at its October 27, 1997, meeting be, and hereby is, approved and adopted.

2. That the Director of the Department of Engineering, after consultation with and approval by the City Manager, is hereby authorized and directed to promulgate, publish and distribute addenda to the *Design Criteria Manual* in the following circumstances:

   a. When definitions of terms contained in the Glossary must be amended to conform to changes in source documents for those definitions (e.g., definitional changes made in the *Newport News City Code*); or

   b. Technical changes and additions required by law or regulation promulgated by the City or by the Commonwealth of Virginia or the Congress of the United States of America or authorized departments or agencies of the State or Federal government.

3. That in cases in which the *Design Criteria Manual* contains phrases similar to "as approved by the Director", "as required by the Director", or other like language, the Director of the Department of Engineering or a designee of such Director shall have authority to exercise discretion in the approval of design standards within the following guidelines:

   a. When performance criteria are involved and an applicant for plan approval establishes that the design proposed in the applicant's plan will produce performance characteristics equal to, or better than, the standard prescribed in the *Design Criteria Manual*;

   b. When safety considerations are involved and an applicant for plan approval establishes that the design proposed in the applicant's plan will create conditions which are at least as safe as the standard prescribed in the *Design Criteria Manual*;

c. When health considerations are involved and an applicant for approval establishes that the design proposed in the applicant's plan will create conditions which conform to health standards at least as stringent as the standard prescribed in the *Design Criteria Manual*; or

d. When quality standards are involved and an applicant for approval establishes that the design proposed in the applicant's plan will create quality conditions equal to, or better than, the standard prescribed in the *Design Criteria Manual*.

4. That the approval of the criteria contained in the *Design Criteria Manual* shall not be interpreted to supercede the provisions of the *Uniform Statewide Building Code* or the *Fire Code* or any other provision of the *Newport News City Code*. Additionally, whenever any statute, local ordinance or regulation provides higher standards than those contained in the *Design Criteria Manual*, the provisions of such statute, local ordinance or regulation shall govern.

5. That, upon adoption, this Resolution shall be deemed a part of, and shall be incorporated into, the *Design Criteria Manual*.

6. That the *Design Criteria Manual* adopted hereby shall be effective from and after December 1, 1997. The processing of plans submitted for consideration using the standards contained in the first edition of the *Design Criteria Manual*, and accepted for processing prior to December 1, 1997, shall be reviewed and approved in the context of the standards and criteria of the first edition manual.

PASSED BY THE COUNCIL OF THE CITY OF NEWPORT NEWS OCTOBER 27, 1997

Bernice I. Berry, CMC/AAE
City Clerk

Joe S. Frank
Mayor

A true copy teste:

City Clerk

Foreword

Edgar E. Maroney
City Manager

The ***Design Criteria Manual*** helps ensure that consistent, safe and up-to-date design practices will be used for all improvements in the City, whether they are publicly or privately constructed. It is a formal statement of the criteria to be used in the design and review of all public improvements and in the review and approval of site and subdivision plans. This edition incorporates many years of empirical engineering experiences along with contemporary technologies and construction techniques.

The ***Design Criteria Manual*** is prepared by the Newport News Department of Engineering. Its purpose is to provide information about City standards to the professional designing stormwater management facilities, sanitary sewers, pump stations, public buildings, streets, sidewalks, bike paths, parking lots, entrances, and lighting systems. This edition also contains information about lead and asbestos abatement responsibilities, alerts designers to future requirements for metric measurement, and highlights ideas for positioning utilities in a regionalized manner.

Obviously new materials, equipment, technologies, methods and regulations will appear after publication, therefore addendums will be required in order to protect public interests. When making such adjustments, we will evaluate the best available technology that is applicable at the time while considering public safety, health and welfare as well as cost effectiveness and benefits to be derived. In that same vein, users of this manual also are invited to send their suggestions for its improvement to the Director of Engineering for consideration.

Finally, the Department of Engineering keeps a list of people who receive copies of this manual. They will be sent copies of changes to the manual as they occur. In order to receive these revisions, it is important to notify the Department of Engineering of any change of address.

Edgar E. Maroney
City Manager

Preface
to the Second Edition

Dr. Mostafa A. Sabbah, P.E.
Director of Engineering

This Second Edition of the ***Design Criteria Manual*** is built solidly upon the first version published in 1984. It takes advantage of combined experiences accumulated by engineers and technicians who have been on staff since then as well as the fresh ideas offered by those who have joined us in the interim.

Our objectives in this edition have been to account for technological and legislative changes, to improve the content and the clarity of textual material and design criteria plates, to introduce useful illustrative materials wherever pertinent, and to further the objectives of the City's ***Framework for the Future*** comprehensive plan.

To aid the reader, the relevant section of the ***Contents*** is repeated at the beginning of each chapter. A section for keeping track of ***Addendums*** is included immediately following the ***Contents***. This edition also includes ***Designer Notes*** pages, located at the end of each chapter, that designers are encouraged to use for handwritten notes, moving the pages around within the manual to wherever the information will be most helpful.

The chapters have been reorganized somewhat and are arranged as follows:

Chapter 1 (Stormwater Management) combines the original Chapter 1 (Drainage) with the original Chapter 6 (Reservoir Protection) and takes on laws, rules, regulations, criteria, etc. related to and stemming from the Federal Clean Water Act. This chapter is presented in three parts:

Part One (Overview) provides an overview of the laws, rules and regulations addressed in the chapter.

Part Two (Water Quantity Control) generally tracks with the previous drainage and reservoir protection chapters but refers the reader to the new information in Part Three when appropriate.

Part Three (Water Quality Control) not only takes on some of the old reservoir protection chapter but also the Federal Clean Water Act, *et al*, cross-referencing to relevant sections of Part Two.

Chapter 2 (Sewage Collection Systems) is updated for improved construction techniques, materials and equipment. Also, the chapter reflects greater standardization of criteria in a more regional approach by incorporating several concepts developed in recent years by the Hampton Roads Planning District Commission (HRPDC) in conjunction with the Hampton Roads Utility and Heavy Contractors Association (HRUHCA).

Chapter 3 (Pump Stations) takes advantage of enhanced technology and introduces standardization of pump station construction through the use of three station models for design purposes. The chapter reflects substantial input from maintenance forces.

Chapter 4 (Streets) becomes more stringent and site-oriented. More soils boring and testing are required for site-specific conditions. Roadways and parking areas must be thicker to accommodate increased traffic and heavier loads. The following highlights other new information in this chapter:

- sidewalk options in residential areas are explained,
- residential driveway width is limited to 20 feet,
- exceptions to commercial driveway width limits are allowed under specified conditions,
- the City Driveway Access Policy is included as Appendix 1 to the chapter,
- requirements for sight distance at crossovers and commercial entrances are explained,
- "L" intersections are prohibited,
- details are provided for one-way and two-way bikepaths and combination sidewalks/bikepaths,
- a mountable design for curb & gutter has been added,
- handicap curb ramps and accessible on- and off-street parking spaces are detailed, and
- alternative treatments are provided for dead-end streets and temporary turnarounds.

Chapter 5 (Public Buildings) generally updates references and adds criteria that, through technological advances and experience, have become common practice in the architectural profession. City responsibility regarding the abatement of asbestos and lead materials is clearly stated in section 5.0.2.

Chapter 6 (Private Development) is new. It basically refers to the other chapters as controlling the activity that is contemplated but outlines the exceptions that may apply. Information on parking lot pavement and handicap parking space markings is included. A section on lighting cites the safety factor involved and refers to technological advances for achieving required illuminance levels economically; a table on general lighting standards is provided.

Chapter 7 (Miscellany) is also new and covers two new activities not addressed in the previous edition: Metric and Utility Locating. The metric section relies heavily on information from ***Metric in Construction***, a newsletter published by the Construction Metrication Council of the National Institute of Building Sciences, Washington, D.C. The utility locating section is adapted from conceptual drawings developed by the Standardization Committee of HRPDC and HRUHCA. Criteria plates 4701 and 4702 obviously depict ideal situations that won't be achievable in every case. Still, positioning utilities in the areas shown on the plates is worthy of consideration in designing projects and we will do so wherever applicable.

The ***Glossary*** includes definitions and acronyms used in the manual. Except for a few, the definitions were extracted from various chapters of the *Newport News City Code*. Their inclusion in the manual does not relieve designers from the responsibility for being knowledgeable of changed meanings in the *Code*.

A ***References*** section in the back is intended to assist designers when additional research is necessary.

This manual was made possible only through the collective efforts of many, many people; too many, in fact, to adequately recognize in this small space. If any person who helped finds his or her name "unsung" here, please rest assured that your contribution is most sincerely appreciated.

Although all department engineers were involved in producing this manual, I will limit recognition here to the engineers who were responsible for chapter information as indicated below:

- Chapter 1, Stormwater Management
  Lambert B. Logan, P.E., Engineer III, Stormwater Management Division
- Chapter 2, Sewage Collection Systems; and
- Chapter 3, Pump Stations
  Stephen L. Williams, P.E., Engineer III, Technical Services Division

- Chapter 4, Streets
  John B. Kaoudis, P.E., Senior Engineer, Chief of the Traffic Analysis Division (Traffic Engineering aspects)
  Kim K. Dugan, Engineer II, Technical Services Division (Civil Engineering aspects)
- Chapter 5, Public Buildings
  Brian D. Garrett, AIA, Architectural Engineer, Engineering Administration (Architectural design aspects)
  Michael F. Griffin, Architectural Field Engineer, Chief of the Asbestos/Lead Inspection Division and supervisor of architectural inspection (Asbestos/Lead management and architectural construction aspects)
- Chapter 6, Private Development
  Tan C. Young, P.E., Senior Engineer, Chief of the Technical Services Division
- Chapter 7 (Miscellany)
  (Compiled from various sources by the manual editor.)

A special thanks to ***Bob Shults*** and ***Marlene Johnson***. Bob edited the manual and then brought the whole thing together; he is the Assistant to the Director (Engineering). Marlene produced the criteria plates as well as a majority of the figures contained in the manual; she is an Engineering Technician II in the Technical Services Division. Congratulations to you both on a job well done.

I want to thank ***Judy Lewis*** of the Graphic Services Division of the Department of Planning and Development for a fine-looking cover. Great creativity!!

Also, thanks to ***Mark Hargrave***, who heads up our Mapping Office, for Figure 1-2-C in Part Two of Chapter 1. This figure gives the reader an idea of the capabilities available through the Geographic Information System (GIS) operated by the department.

Finally, my thanks to the **Honorable City Council**, **City Manager *Edgar E. Maroney***, and **Assistant City Manager *Randy W. Hildebrandt*** for their valued counsel and steadfast encouragement. I should add "patience," because publication of this Second Edition of the *Design Criteria Manual* has been a long and arduous journey for all of us.

Mostafa A. Sabbah, Ph.D., P.E.
Director of Engineering

Table of Contents

1 *Chapter 1*
STORMWATER MANAGEMENT

2 *Chapter 2*
SEWAGE COLLECTION SYSTEMS

3 *Chapter 3*
PUMP STATIONS

4 *Chapter 4*
STREETS

5 *Chapter 5*
PUBLIC BUILDINGS

6 *Chapter 6*
PRIVATE DEVELOPMENT

7 *Chapter 7*
MISCELLANY
(Utility Locating & Metric)

8 GLOSSARY & REFERENCES

For additional copies, contact:

Department of Engineering
CITY OF NEWPORT NEWS
2400 Washington Avenue
Newport News, Virginia 23607

Tel: (757) 926-8611
Fax: (757) 926-8300
Internet: www.newport-news.va.us

Contents

ADOPTION RESOLUTION i
FOREWORD ii
PREFACE to the Second Edition iv
CONTENTS viii
Table 0-1, Addendum Tracking Sheet xxi

CHAPTER 1
STORMWATER MANAGEMENT

PART ONE -- OVERVIEW

1.0 REGULATIONS 1-1-1
1.1 NPDES REGULATIONS 1-1-2
1.2 STATE STORMWATER MANAGEMENT REGULATIONS 1-1-2
1.3 CHESAPEAKE BAY REGULATIONS 1-1-3
1.4 CITY RESERVOIR PROTECTION ORDINANCE 1-1-3
1.5 CHAPTER RESTRICTIONS 1-1-3
1.6-1.19 (Reserved)

There are no illustrations for Part One of Chapter 1

PART TWO -- WATER QUANTITY CONTROL

1.20 GENERAL 1-2-1
1.20.1 Design Principles 1-2-1
1.20.2 Drainage System Elements 1-2-2
1.20.3 Design Storm Frequency 1-2-2
1.20.4 Flood Magnitude Estimates 1-2-4
1.20.5 Computer-Aided Design 1-2-4
1.20.6 Easements 1-2-4
1.21 DESIGN PROCEDURE 1-2-6
1.21.1 Maps and Surveys 1-2-6
1.21.2 Existing Utilities and Information 1-2-6
1.21.3 Ultimate Development 1-2-6
1.21.4 Runoff Determination 1-2-6
1.21.5 Preliminary Layout 1-2-6
1.21.6 Erosion and Sedimentation Control 1-2-6
1.21.7 Flood Plain Development 1-2-7
1.21.8 Environmentally Sensitive Areas 1-2-7
1.21.9 SWM Criteria Applicability 1-2-10
1.22 ENCLOSED SYSTEMS 1-2-11
1.22.1 Inverts 1-2-11
1.22.2 Pipe 1-2-11
1.22.3 Access Points 1-2-12
1.22.4 Depth 1-2-12
1.22.5 Hydraulic Grade Line 1-2-12
1.22.6 Material 1-2-12
1.22.7 Pipe Bedding 1-2-12
1.22.8 Inlets 1-2-14
1.22.9 Easement Requirement 1-2-14
1.23 OPEN SYSTEMS 1-2-15
1.23.1 Design Factors 1-2-15
1.23.2 Swale 1-2-16
1.23.3 Connection 1-2-16
1.23.4 Velocity 1-2-16
1.23.5 Capacity 1-2-16
1.23.6 Cross-sections 1-2-16
1.23.7 Easement Requirement 1-2-16
1.24 CULVERTS 1-2-19
1.24.1 100-Year Flood 1-2-19
1.24.2 Minimum Culvert Size 1-2-19
1.24.3 Freeboard 1-2-19
1.25 DETENTION FACILITIES 1-2-19
1.25.1 Hydrographic Analysis 1-2-20
1.25.2 Design Criteria 1-2-20
1.25.3 Impoundment Types 1-2-21
1.25.4 Data Submittal 1-2-21
1.25.5 Easement Requirement 1-2-21

1.26 DESIGN DOCUMENTS 1-2-22
1.26.1 Plan 1-2-22
1.26.2 Profile 1-2-22
1.26.3 Data Submittal 1-2-22
1.26.4 Design Checklist 1-2-22
1.27 DESIGN STANDARD PLATES 1-2-28
1.28-1.39 (Reserved)

List of Illustrations for Part Two of Chapter 1

TABLES
1-2-1 Minimum Storm Frequencies for Use in Design 1-2-3
1-2-2 Minimum Values of "n" for Use in Pipe Design 1-2-13
1-2-3 Maximum Permissible Channel Velocities 1-2-17
1-2-4 Manning's Roughness Coefficients 1-2-18
FIGURES
1-2-A Guideline for Application of Various Methods based on Drainage Area 1-2-5
1-2-B Floodway Schematic 1-2-8
1-2-C Chesapeake Bay Preservation Areas and Reservoir Protection Districts 1-2-9
1-2-D Runoff Coefficients 1-2-23
1-2-E Rainfall Intensity Chart for Use in the City of Newport News 1-2-24
1-2-F Overland Flow Time 1-2-25
1-2-G Time of Concentration of Small Drainage Basins 1-2-26
1-2-H Design Checklist -- Stormwater Management Facilities 1-2-27
PLATES
4101 Earth Swale 1-2-29
4102 Concrete Swale 1-2-30
4103 Yard Drain 1-2-31
4104 Curb Drop Inlet 1-2-32
4105 Double Curb Drop Inlet 1-2-33
4106 Curb Drop Inlet Casting and Cover 1-2-34
4107 Sidewalk Drain Trough 1-2-35

PART THREE -- WATER QUALITY CONTROL

1.40 CONSOLIDATED BMP REQUIREMENTS 1-3-1
1.41 BMPs FOR NEW DEVELOPMENT OR REDEVELOPMENT 1-3-2
1.41.1 Suitable BMPs 1-3-2
1.41.2 Wet and Dry Detention 1-3-2
1.41.3 Infiltration 1-3-2
1.41.4 Swales 1-3-2
1.41.5 Biofiltration 1-3-3
1.41.6 Natural Open Space 1-3-3
1.42 BMP EFFICIENCY REQUIREMENTS 1-3-3
1.42.1 Stormwater Pollution Loading Factors 1-3-6
1.42.2 City Reservoir Protection Ordinance 1-3-6

1.42.3 State Stormwater Management Regulations 1-3-6
1.42.4 CBLAD Regulations 1-3-8
1.42.5 Consolidated BMP Performance Criteria 1-3-9
1.43 TECHNOLOGY-BASED BMP CRITERIA 1-3-9
1.43.1 BMP Criteria: 0-10% Imperviousness 1-3-13
1.43.2 BMP Criteria: 11-36% Imperviousness 1-3-13
1.43.3 BMP Criteria: 37-55% Imperviousness 1-3-13
1.43.4 BMP Criteria: 56-80% Imperviousness 1-3-13
1.43.5 BMP Criteria: 81-100% Imperviousness 1-3-14
1.44 BMP COVERAGE OF DEVELOPMENT SITE 1-3-15
1.44.1 Minimum Requirements 1-3-15
1.44.2 Supplemental Requirements 1-3-15
1.44.3 Interpretation of Table Values 1-3-16
1.44.4 Use of Natural Open Space 1-3-22
1.45 CBLAD BMP REQUIREMENTS FOR REDEVELOPMENT 1-3-22
1.45.1 Pollution Reduction Standards 1-3-22
1.45.2 Chesapeake Bay Management Area Standards 1-3-22
1.46 BMP DESIGN 1-3-24
1.46.1 Stormwater Management Plan 1-3-24
1.46.2 Guidelines 1-3-25
1.47 WET DETENTION BMP 1-3-25
1.47.1 Description 1-3-25
1.47.2 Applicability 1-3-27
1.47.3 Planning Considerations 1-3-27
1.47.4 Design Criteria 1-3-28
1.47.5 Maintenance 1-3-31
1.48 EXTENDED DRY DETENTION BMP 1-3-32
1.48.1 Description 1-3-32
1.48.2 Applicability 1-3-32
1.48.3 Planning Considerations 1-3-34
1.48.4 Design Criteria 1-3-34
1.48.5 Maintenance 1-3-39
1.49 MODIFIED EXTENDED DRY DETENTION BMP 1-3-40
1.49.1 Description 1-3-40
1.49.2 Applicability 1-3-40
1.49.3 Planning Considerations 1-3-42
1.49.4 Design Criteria 1-3-42
1.49.5 Maintenance 1-3-48
1.50 INFILTRATION BMP 1-3-49
1.50.1 Feasibility Tests 1-3-49
1.50.2 Description 1-3-50
1.50.3 Applicability 1-3-50
1.50.4 Planning Considerations 1-3-54
1.50.5 Design Criteria 1-3-54
1.50.6 Maintenance 1-3-57

1.51 GRASSED SWALE WITH CHECK DAMS 1-3-57
1.51.1 Description 1-3-57
1.51.2 Applicability 1-3-58
1.51.3 Planning Considerations 1-3-58
1.51.4 Design Criteria 1-3-62
1.51.5 Maintenance 1-3-63
1.52 BIOFILTRATION SWALE 1-3-65
1.52.1 Description 1-3-65
1.52.2 Applicability 1-3-65
1.52.3 Planning Considerations 1-3-67
1.52.4 Design Criteria 1-3-67
1.52.5 Maintenance 1-3-68
1.53 REDUCTION OF BUFFER ZONE 1-3-69
1.53.1 Chesapeake Bay Management Areas 1-3-69
1.53.2 Reservoir Protection Districts 1-3-71
1.54-1.99 (Reserved)

List of Illustrations for Part Three of Chapter 1

TABLES

1-3-1 Total P Removal Efficiencies for BMPs Suitable for Development and Redevelopment in the City of Newport News 1-3-4
1-3-2 BMP Efficiency Requirements 1-3-5
1-3-3 Average Watershed Loadings of Total P: “Average Land Cover” Conditions in the City of Newport News 1-3-7
1-3-4 BMP Technology Criteria Matrix for New Development 1-3-11
1-3-5 Acceptable BMP Technology Checklist (City of Newport News) 1-3-12
1-3-6 Supplemental BMP Requirements for Wet Detention BMPs (Development within Water Supply Watersheds) 1-3-17
1-3-7 Supplemental BMP Requirements for Wet Detention BMPs (Development outside Water Supply Watersheds) 1-3-18
1-3-8 Supplemental BMP Requirements for Extended Dry Detention BMPs 1-3-19
1-3-9 Supplemental BMP Requirements for Modified Extended Dry Detention BMPs 1-3-20
1-3-10 Supplemental BMP Requirements for Infiltration BMPs (Development Projects that are Less than Five Acres) 1-3-21
1-3-11 BMP Requirements for Redevelopment Projects (CBLAD 10-Percent Reduction Standard) 1-3-23
1-3-12 Recommended Maximum Water Depths for Emergent Wetland Plant Species 1-3-45
1-3-13 Permissible Velocities for Various Ground Covers 1-3-64
1-3-14 Manning’s Roughness Coefficient (“n” Value) for Vegetation 1-3-70
1-3-15 Supplemental BMP Efficiency (Total P Removal) Required for Different Buffer Zone Lengths in Chesapeake Bay Resource Protection Areas (RPAs) 1-3-70

FIGURES

1-3-A BMP Performance Criteria Curves for Use in the City of Newport News . . . 1-3-10
1-3-B Schematic of Wet Detention Basin BMP 1-3-26
1-3-C Schematic of Extended Dry Detention Basin BMP (Two-Stage Design) 1-3-33
1-3-D Schematic of Perforated Riser Outlet for Extended Dry Detention Basin . . . 1-3-38
1-3-E Schematic of Modified Extended Dry Detention Basin BMP 1-3-41
1-3-F Typical Application of Infiltration Trench with Stone Surface 1-3-51
1-3-G Grate and Perforated Inlet for Infiltration Trench with Vegetated Surface . . . 1-3-52
1-3-H Schematic of Dry Well BMP 1-3-53
1-3-I Infiltration Trench with Observation Well Detail (Cross-section) 1-3-56
1-3-J Grassed Swale with Check Dams (Schematic) 1-3-59
1-3-K Grassed Swale with Check Dams (Detail) 1-3-60
1-3-L Grassed Swale with Check Dams (Views) 1-3-61
1-3-M Biofiltration Schematic 1-3-66

PLATES

None

CHAPTER 2
SEWAGE COLLECTION SYSTEMS

2.0 GENERAL 2-1
2.0.1 System Design 2-1
2.0.2 Design Period 2-1
2.0.3 Capacity Factors 2-2
2.0.4 Design Criteria 2-2
2.1 GRAVITY SEWERS 2-4
2.1.1 Minimum Size 2-4
2.1.2 Depth 2-4
2.1.3 Slope 2-5
2.1.4 Alignment 2-5
2.1.5 Increasing Pipe Size 2-5
2.1.6 High Velocity Protection 2-5
2.1.7 Building Sewer Lines and Connections 2-5
2.1.8 Materials, Joints, Construction, Bedding, Testing, Etc. 2-5
2.1.9 Boring and Jacking 2-7
2.1.10 HRSD Gravity Sewer Interceptor 2-7
2.2 FORCE MAINS 2-7
2.2.1 Minimum Size 2-7
2.2.2 Velocity 2-7
2.2.3 Air Relief Valve 2-7
2.2.4 Blow-Off Valve 2-7
2.2.5 Termination 2-7
2.2.6 Anchorage 2-8
2.2.7 Materials, Joints, Construction, Bedding, Testing, Etc. 2-8
2.2.8 Boring and Jacking 2-8

2.2.9 HRSD Force Main Interceptor 2-8
2.2.10 Emergency Pump Connection 2-8
2.3 MANHOLES 2-8
2.3.1 Location 2-8
2.3.2 Manhole Drop 2-8
2.4 SEWER LAYOUT AT STREAMS, ESTUARIES, LAKES AND RESERVOIRS 2-9
2.5 PROTECTION OF WATER SUPPLIES 2-9
2.5.1 Water Supply Interconnection 2-9
2.5.2 Relation to Waterworks Structures 2-9
2.6 (RESERVED) 2-10
2.7 DESIGN DOCUMENTS 2-10
2.7.1 Title and General Layout Sheets 2-10
2.7.2 Plan, Profile and Detail Sheets 2-11
2.8 DESIGN STANDARD PLATES 2-12
2.9-2.99 (Reserved)

List of Illustrations for Chapter 2

TABLES

2-1 Design Flows for New Sewage Works 2-3
2-2 Minimum Slope 2-6

FIGURES

None

PLATES

4201 House Lateral 2-14
4202 Ductile Iron House Lateral for Deep Sewer Main 2-15
4203 Force Main Connection to Gravity Sewer 2-16
4204 Cast Iron Cleanout Box 2-17
4205 Steel Casing Installation (General) 2-18
4206 Steel Casing Installation (Gravity Sewer) 2-19
4207 Air Relief Valve 2-20
4208 Blow-Off 2-21
4209 Force Main Connection to Manhole 2-22
4210 Force Main Bend Anchorage 2-23
4211 Force Main Tee and Dead-End Anchorage 2-24
4212 Bedding for Pipe 2-25
4213 Steel Casing Installation (Force Main) 2-26
4214 Force Main Connection to HRSD 2-27
4215 Emergency Pump Connection 2-28
4216 Precast Manhole Cross-section 2-29
4216A 60” Precast Manhole Cross-section. 2-29.1
4217 Manhole Invert Shaping 2-30
4218 Precast Manhole with Monolithic Extended Drop 2-31
4219 Shallow Precast Manhole 2-32
4220 Inlet and Outlet Pipes 2-33
4221 Manhole Steps 2-34
4222 Manhole Frame & Cover (Non-Watertight) 2-35

4223 Manhole Frame & Cover (Watertight w/Lock Bar) 2-36
4224 Manhole Frame & Cover (Watertight w/Gasket) 2-37
4225 Brick Manhole Cross-section 2-38
4226 Shallow Brick Manhole 2-39
4227 External Drop Connection 2-40
4228 Pile Bent Support under Pipe 2-41

CHAPTER 3
PUMP STATIONS

3.0 GENERAL 3-1
3.0.1 Class I Reliability 3-1
3.0.2 Design Flow 3-2
3.1 STRUCTURES 3-2
3.1.1 Wet Wells 3-2
3.1.2 Pump Rooms 3-4
3.1.3 Motor Rooms 3-5
3.1.4 Miscellaneous Structural Requirements 3-6
3.2 EQUIPMENT 3-7
3.2.1 Pumps 3-7
3.2.2 Liquid Level Control Panel (required for all pump stations) 3-10
3.2.3 Standby Emergency Power Generator 3-13
3.2.4 Fuel Storage Tanks 3-15
3.2.5 Alarm Telemetry System 3-15
3.2.6 Electrical 3-16
3.2.7 Potable Water Service (required for all pump stations) 3-16
3.2.8 Piping 3-17
3.3 ENGINEERING DOCUMENTS 3-17
3.3.1 Plans 3-17
3.3.2 Specifications 3-19
3.3.3 Calculations 3-19
3.4 DESIGN STANDARD PLATES 3-19
3.5-3.99 (Reserved)

List of Illustrations for Chapter 3

TABLES

3-1 Painting Scheme 3-8

FIGURES

None

PLATES

4301 Typical Pump Station Design (Wet Well/Dry Well) 3-20
4302 Typical Pump Station Design (Suction Lift w/Generator) 3-21
4303 Typical Pump Station Design (Grinder/Submersible Pump) 3-22
4304 Air Relief Line Discharge Funnel 3-23

CHAPTER 4
STREETS

4.0 GENERAL 4-1
4.0.1 Responsibility 4-1
4.0.2 Methods 4-2
4.1 SOILS EVALUATION 4-2
4.1.1 Sampling 4-2
4.1.2 Boring 4-3
4.1.3 Classification 4-3
4.1.4 Report 4-3
4.2 PAVEMENT SECTION DESIGN 4-4
4.2.1 Design CBR 4-4
4.2.2 Other Design Options 4-4
4.2.3 Design Period 4-7
4.2.4 Plans 4-7
4.2.5 Traffic 4-7
4.2.6 Narrative 4-7
4.2.7 Alternatives/Recommendation 4-7
4.3 CONSTRUCTION 4-7
4.3.1 Utilities 4-7
4.3.2 Drainage 4-7
4.3.3 Proof-rolling 4-7
4.3.4 Compaction 4-8
4.3.5 Final Asphalt Surface 4-8
4.4 ROADWAY DESIGN FACTORS 4-8
4.4.1 Intersection Sight Distance 4-8
4.4.2 Intersection and Crossover Spacing 4-8
4.4.3 L-Intersection 4-10
4.4.4 Curb & Gutter and Median Curb 4-10
4.4.5 Minimum Centerline Street Radii 4-10
4.4.6 Guardrail 4-10
4.4.7 Right-of-way Monuments 4-10
4.4.8 Cul-de-sacs 4-10
4.4.9 Driveway Aprons 4-11
4.4.10 Entrances 4-11
4.4.11 Sidewalks and Bikepaths 4-13
4.4.12 Handicap Parking 4-14
4.4.13 Streetlight Poles and Luminaires 4-14
4.4.14 Private Street 4-15
4.5 DEAD-END STREET TREATMENTS 4-15
4.5.1 Barricades 4-15
4.5.2 Object Markers 4-15
4.6 TRAFFIC CONTROL 4-16
4.6.1 Applicability 4-16
4.6.2 Traffic Control Easement 4-17

4.7 DRIVEWAY ACCESS 4-17
4.7.1 Policy Established 4-17
4.7.2 Supplementary Design Aids 4-17
4.8 DESIGN STANDARD PLATES 4-19
4.9-4.99 (Reserved)

List of Illustrations for Chapter 4

TABLES
4-1 Minimum Street Parameters 4-5
4-2 Minimum Residential Street Sections (in inches) 4-6
4-3 Sight Distance along Major Road at Intersection with Minor Road, Crossover, and Commercial Entrance 4-9
4-4 Intersection Spacing 4-9
4-5 Non-Residential Driveway Spacing per Public Street Frontage 4-18
FIGURES
None
APPENDICES
1 Driveway Access Policy 4-21
PLATES
4401 Major Arterial Street Section (Minimum 70' Right-of-Way; Undivided Roadway--12' Travel Lanes) 4-25
4402 Major Arterial Street Section (Minimum 80' Right-of-Way; Divided Roadway--11' Travel Lanes) 4-26
4403 Major Arterial Street Section (Minimum 90' Right-of-Way; Federal Standard; Divided Roadway--12' Travel Lanes) 4-27
4404 Major Arterial Street Section (Minimum 110' Right-of-Way; Divided Roadway--11' Travel Lanes) 4-28
4405 Major Arterial Street Section (Minimum 110' Right-of-Way; Divided Roadway--12' Travel Lanes) 4-29
4406 Collector Street Section (60' Right-of-Way) 4-30
4407 Minor Arterial Street Section (70' Right-of-Way; Undivided Roadway--11' Travel Lanes) 4-31
4408 Residential Street Section (40' & 50' Rights-of-Way) 4-32
4409 Private Street Section 4-33
4410 6" Combination Curb & Gutter and Median Curb 4-34
4411 4" Combination Curb & Gutter and Median Curb 4-35
4412 Street Centerline Radii 4-36
4413 Right-of-Way Monuments 4-37
4414 Residential Cul-de-sac 4-38
4415 Residential Cul-de-sac w/Future Extension 4-39
4416 Commercial Cul-de-sac 4-40
4417 Commercial Entrance (CG-10A-NN) 4-41
4418 Commercial Entrance (CG-13-NN) 4-42
4419 Commercial Entrance (VDOT CG-9D) 4-43
4420 Commercial Entrance Taper 4-44
4421 Residential Concrete Entrance (Streets w/Curb & Gutter) 4-45
4422 Residential Concrete Entrance (Streets w/o Curb & Gutter) 4-46

4423 Residential Asphalt Entrance (Streets w/o Curb & Gutter) 4-47
4424 H/C Curb Ramp (Perpendicular; Non-Parkway) 4-48
4425 H/C Curb Ramp (Parallel; Non-Parkway) 4-49
4426 H/C Curb Ramp (Parkway Setback) 4-50
4427 Sidewalk (Cross-section) 4-51
4428 Bikepath 4-52
4429 Combination Sidewalk/Bikepath (One-Way Design; Both Sides of Street) 4-53
4430 Combination Sidewalk/Bikepath (Two-Way Design; One Side of Street) 4-54
4431 Accessible Parallel On-Street Parking Spaces 4-55
4432 Typical Handicap Parking Space 4-56
4433 Accessible Van Handicap Parking Space 4-57
4434 Dead-End Street Treatments 4-58

CHAPTER 5
PUBLIC BUILDINGS

5.0 GENERAL 5-1
5.0.1 Registration, license required 5-1
5.0.2 Objective 5-1
5.1 SPECIFICATIONS 5-2
5.1.1 Substitutions 5-2
5.1.2 Item selection 5-2
5.1.3 Materials/Methods 5-2
5.1.4 Compliance 5-2
5.2 SITE WORK 5-2
5.2.1 Drawings and specifications 5-2
5.2.2 Foundations 5-3
5.3 CONCRETE 5-3
5.3.1 Design responsibility 5-3
5.3.2 Requirements 5-3
5.4 MASONRY 5-4
5.4.1 Waterproofing 5-4
5.4.2 Mortar 5-4
5.4.3 Accessories 5-4
5.5 METALS 5-4
5.6 CARPENTRY 5-4
5.6.1 Framing 5-4
5.6.2 Trusses 5-5
5.7 ROOFING 5-5
5.7.1 Guarantee 5-5
5.7.2 Drainage 5-5
5.7.3 Accessories 5-5
5.7.4 Materials 5-5

5.8 DOORS AND WINDOWS 5-5
5.8.1 Doors 5-5
5.8.2 Windows 5-5
5.8.3 Glazing 5-6
5.8.4 Hardware 5-6
5.9 FINISHES 5-6
5.10 MECHANICAL 5-6
5.10.1 Plumbing 5-6
5.10.2 Mechanical and refrigeration 5-6
5.11 ELECTRICAL 5-6
5.12-5.99 (Reserved)

There are no illustrations for Chapter 5

CHAPTER 6
PRIVATE DEVELOPMENT

6.0 GENERAL 6-1
6.1 STORMWATER MANAGEMENT 6-1
6.1.1 Facilities 6-1
6.1.2 Retention pond 6-1
6.2 SEWAGE COLLECTION SYSTEMS 6-2
6.3 PUMP STATIONS 6-2
6.3.1 Design 6-2
6.3.2 Small force main 6-2
6.3.3 Identification tape 6-2
6.4 STREETS 6-2
6.4.1 Design 6-2
6.4.2 Parking area pavement section 6-2
6.4.3 Parking lot pavement markings 6-2
6.5 LIGHTING 6-3
6.5.1 Safety factor 6-3
6.5.2 Design 6-3
6.6-6.99 (Reserved)

List of Illustrations for Chapter 6

TABLES
6-1 General Lighting Standards 6-5
FIGURES
None
PLATES
None

CHAPTER 7
MISCELLANY

7.0 GENERAL 7-1
7.1 METRIC 7-1
7.1.1 Terminology 7-1
7.1.2 Metric Units 7-2
7.1.3 Soft (rounded) Values 7-2
7.1.4 Concrete Conversions 7-2
7.2 UTILITY LOCATING 7-9
7.2.1 Connections 7-9
7.2.2 Locations 7-9
7.3 DESIGN STANDARD PLATES 7-9
7.4-7.99 (Reserved)

List of Illustrations for Chapter 7

TABLES
7-1 Metric Units Used by the Construction Trades 7-3
7-2 Metric Conversion (Examples) 7-6
FIGURES
None
PLATES
4701 Utility Connections (Customer Service) 7-10
4702 Utility Locations (Municipal Construction) 7-11

GLOSSARY g-1
REFERENCES r-1

Addendums

The table below is provided for the holder's use in keeping track of addendums that may be published by the Director from time-to-time. When posted, it can serve as a quick and convenient reference for ensuring that everyone involved in a discussion of the criteria contained in this manual has the latest information.

Table 0-1

ADDENDUM TRACKING SHEET

ADDENDUM NUMBER	REFERENCE (FILED BEHIND THIS PAGE)	DATE POSTED	WHO POSTED
not applicable	Errata, 11-24-97	11-24-97	DCM Editor
1	Director Memorandum, 12-15-05	12-15-05	DCM Editor

CITY OF NEWPORT NEWS
Department of Engineering
Newport News, Virginia 23607

Tel: (757) 926-8611; Fax: (757) 926-8300
Internet: www.newport-news.va.us

November 24, 1997

ERRATA SHEET for the Newport News *Design Criteria Manual (2nd Edition)* dated August 1997 and adopted by the City Council October 27, 1997

Please remove old pages and insert new ones as follows:

Remove:	Insert:
• (original) xxi	• (errata, 11-24-97) xxi
• (original) 4-32 (Plate 4408)	• (errata, 11-24-97) 4-32 (Plate 4408)
• (original) 4-33 (Plate 4409)	• (errata, 11-24-97) 4-33 (Plate 4409)

After posting, please file this sheet behind the "Addendum Tracking Sheet" located at the end of the "Contents" in the front section of the manual.

MOSTAFA A. SABBAH, Ph.D., P.E.
Director of Engineering

MAS:ss
(erratasheet.wpd)

Attachments (new pages)

City of Newport News

Department of Engineering
2400 Washington Avenue
Newport News, Virginia 23607

Tel (757) 926-8611

Fax (757) 926-8300

OFFICE OF THE DIRECTOR

December 15, 2005

To: Holders of the City of Newport News 1997 ***Design Criteria Manual***

Subject: Addendum 1 (Looseleaf Supplement)

Reference: Resolution No. 8912-97, October 27, 1997

This addendum contains all materials that have been updated since the manual was originally adopted by the reference.

Remove old pages	Insert new pages
xiv	xiv
1-3-43	1-3-43
Not Numbered	Not Numbered
(above replaces 2nd page of Contents in front of Chap. 2)	
2-7	2-7
2-13	2-13
2-14—2-16	2-14—2-16
2-25	2-25
2-28, 2-29	2-28, 2-29
None	2.29.1
2-32	2-32
2-38, 2-39	2-38, 2-39
3-3	3-3
3-20	3-20
3-22	3-22
4-25	4-25
4-30	4-30
4-34, 4-35	4-34, 4-35
4-47—4-50	4-47—4-50
4-56, 4-57	4-56, 4-57

In the Addendums table on page xxi, record the information relevant to your posting of Addendum 1 and maintain this instruction sheet immediately following page xxi. File the removed pages for reference.

In the future, paper copies of addendums will not be provided. In keeping with modern information technology capabilities, the ***Design Criteria Manual*** itself will soon be made available on the City of Newport News web site under Department of Engineering in the PDF format. All or parts of it will be downloadable free of charge. The issue of any future addendums will be announced and posted on that site. Requests for paper copies of the manual will be discouraged, because only a minimum number of paper copies will be produced. The current charge of $50.00 (plus Virginia sales tax at the prevailing rate at the time of sale) will continue for paper copies and/or CDs containing the manual that may be requested.

If there are questions, please call 757-926-8611.

MOSTAFA A. SABBAH, Ph.D., P.E.
Director of Engineering

MAS:ss
(addend1DCM.doc)

CHAPTER 1
STORMWATER MANAGEMENT

PART ONE -- OVERVIEW

1.0 REGULATIONS 1-1-1
1.1 NPDES REGULATIONS 1-1-2
1.2 STATE STORMWATER MANAGEMENT REGULATIONS 1-1-2
1.3 CHESAPEAKE BAY REGULATIONS 1-1-3
1.4 CITY RESERVOIR PROTECTION ORDINANCE 1-1-3
1.5 CHAPTER RESTRICTIONS 1-1-3
1.6-1.19 (Reserved)

There are no illustrations for Part One of Chapter 1

PART TWO -- WATER QUANTITY CONTROL

1.20 GENERAL 1-2-1
1.20.1 Design Principles 1-2-1
1.20.2 Drainage System Elements 1-2-2
1.20.3 Design Storm Frequency 1-2-2
1.20.4 Flood Magnitude Estimates 1-2-4
1.20.5 Computer-Aided Design 1-2-4
1.20.6 Easements 1-2-4
1.21 DESIGN PROCEDURE 1-2-6
1.21.1 Maps and Surveys 1-2-6
1.21.2 Existing Utilities and Information 1-2-6
1.21.3 Ultimate Development 1-2-6
1.21.4 Runoff Determination 1-2-6
1.21.5 Preliminary Layout 1-2-6
1.21.6 Erosion and Sedimentation Control 1-2-6
1.21.7 Flood Plain Development 1-2-7
1.21.8 Environmentally Sensitive Areas 1-2-7
1.21.9 SWM Criteria Applicability 1-2-10
1.22 ENCLOSED SYSTEMS 1-2-11
1.22.1 Inverts 1-2-11
1.22.2 Pipe 1-2-11
1.22.3 Access Points 1-2-12
1.22.4 Depth 1-2-12
1.22.5 Hydraulic Grade Line 1-2-12
1.22.6 Material 1-2-12
1.22.7 Pipe Bedding 1-2-12
1.22.8 Inlets 1-2-14
1.22.9 Easement Requirement 1-2-14
1.23 OPEN SYSTEMS 1-2-15
1.23.1 Design Factors 1-2-15
1.23.2 Swale 1-2-16
1.23.3 Connection 1-2-16
1.23.4 Velocity 1-2-16
1.23.5 Capacity 1-2-16
1.23.6 Cross-sections 1-2-16
1.23.7 Easement Requirement 1-2-16

1.24 CULVERTS 1-2-19
1.24.1 100-Year Flood 1-2-19
1.24.2 Minimum Culvert Size 1-2-19
1.24.3 Freeboard 1-2-19
1.25 DETENTION FACILITIES 1-2-19
1.25.1 Hydrographic Analysis 1-2-20
1.25.2 Design Criteria 1-2-20
1.25.3 Impoundment Types 1-2-21
1.25.4 Data Submittal 1-2-21
1.25.5 Easement Requirement 1-2-21
1.26 DESIGN DOCUMENTS 1-2-22
1.26.1 Plan 1-2-22
1.26.2 Profile 1-2-22
1.26.3 Data Submittal 1-2-22
1.26.4 Design Checklist 1-2-22
1.27 DESIGN STANDARD PLATES 1-2-28
1.28-1.39 (Reserved)

List of Illustrations for Part Two of Chapter 1

TABLES
1-2-1 Minimum Storm Frequencies for Use in Design 1-2-3
1-2-2 Minimum Values of "n" for Use in Pipe Design 1-2-13
1-2-3 Maximum Permissible Channel Velocities 1-2-17
1-2-4 Manning's Roughness Coefficients 1-2-18
FIGURES
1-2-A Guideline for Application of Various Methods based on Drainage Area 1-2-5
1-2-B Floodway Schematic 1-2-8
1-2-C Chesapeake Bay Preservation Areas and Reservoir Protection Districts 1-2-9
1-2-D Runoff Coefficients 1-2-23
1-2-E Rainfall Intensity Chart for Use in the City of Newport News 1-2-24
1-2-F Overland Flow Time 1-2-25
1-2-G Time of Concentration of Small Drainage Basins 1-2-26
1-2-H Design Checklist -- Stormwater Management Facilities 1-2-27
PLATES
4101 Earth Swale 1-2-29
4102 Concrete Swale 1-2-30
4103 Yard Drain 1-2-31
4104 Curb Drop Inlet 1-2-32
4105 Double Curb Drop Inlet 1-2-33
4106 Curb Drop Inlet Casting and Cover 1-2-34
4107 Sidewalk Drain Trough 1-2-35

PART THREE -- WATER QUALITY CONTROL

1.40 CONSOLIDATED BMP REQUIREMENTS 1-3-1
1.41 BMPs FOR NEW DEVELOPMENT OR REDEVELOPMENT 1-3-2
1.41.1 Suitable BMPs 1-3-2
1.41.2 Wet and Dry Detention 1-3-2
1.41.3 Infiltration 1-3-2
1.41.4 Swales 1-3-2
1.41.5 Biofiltration 1-3-3
1.41.6 Natural Open Space 1-3-3

1.42 BMP EFFICIENCY REQUIREMENTS 1-3-3
1.42.1 Stormwater Pollution Loading Factors 1-3-6
1.42.2 City Reservoir Protection Ordinance 1-3-6
1.42.3 State Stormwater Management Regulations 1-3-6
1.42.4 CBLAD Regulations 1-3-8
1.42.5 Consolidated BMP Performance Criteria 1-3-9
1.43 TECHNOLOGY-BASED BMP CRITERIA 1-3-9
1.43.1 BMP Criteria: 0-10% Imperviousness 1-3-13
1.43.2 BMP Criteria: 11-36% Imperviousness 1-3-13
1.43.3 BMP Criteria: 37-55% Imperviousness 1-3-13
1.43.4 BMP Criteria: 56-80% Imperviousness 1-3-13
1.43.5 BMP Criteria: 81-100% Imperviousness 1-3-14
1.44 BMP COVERAGE OF DEVELOPMENT SITE 1-3-15
1.44.1 Minimum Requirements 1-3-15
1.44.2 Supplemental Requirements 1-3-15
1.44.3 Interpretation of Table Values 1-3-16
1.44.4 Use of Natural Open Space 1-3-22
1.45 CBLAD BMP REQUIREMENTS FOR REDEVELOPMENT 1-3-22
1.45.1 Pollution Reduction Standards 1-3-22
1.45.2 Chesapeake Bay Management Area Standards 1-3-22
1.46 BMP DESIGN 1-3-24
1.46.1 Stormwater Management Plan 1-3-24
1.46.2 Guidelines 1-3-25
1.47 WET DETENTION BMP 1-3-25
1.47.1 Description 1-3-25
1.47.2 Applicability 1-3-27
1.47.3 Planning Considerations 1-3-27
1.47.4 Design Criteria 1-3-28
1.47.5 Maintenance 1-3-31
1.48 EXTENDED DRY DETENTION BMP 1-3-32
1.48.1 Description 1-3-32
1.48.2 Applicability 1-3-32
1.48.3 Planning Considerations 1-3-34
1.48.4 Design Criteria 1-3-34
1.48.5 Maintenance 1-3-39
1.49 MODIFIED EXTENDED DRY DETENTION BMP 1-3-40
1.49.1 Description 1-3-40
1.49.2 Applicability 1-3-40
1.49.3 Planning Considerations 1-3-42
1.49.4 Design Criteria 1-3-42
1.49.5 Maintenance 1-3-48
1.50 INFILTRATION BMP 1-3-49
1.50.1 Feasibility Tests 1-3-49
1.50.2 Description 1-3-50
1.50.3 Applicability 1-3-50
1.50.4 Planning Considerations 1-3-54
1.50.5 Design Criteria 1-3-54
1.50.6 Maintenance 1-3-57
1.51 GRASSED SWALE WITH CHECK DAMS 1-3-57
1.51.1 Description 1-3-57
1.51.2 Applicability 1-3-58
1.51.3 Planning Considerations 1-3-58
1.51.4 Design Criteria 1-3-62
1.51.5 Maintenance 1-3-63

1.52 BIOFILTRATION SWALE 1-3-65
1.52.1 Description 1-3-65
1.52.2 Applicability 1-3-65
1.52.3 Planning Considerations 1-3-67
1.52.4 Design Criteria 1-3-67
1.52.5 Maintenance 1-3-68
1.53 REDUCTION OF BUFFER ZONE 1-3-69
1.53.1 Chesapeake Bay Management Areas 1-3-69
1.53.2 Reservoir Protection Districts 1-3-71
1.54-1.99 (Reserved)

List of Illustrations for Part Three of Chapter 1

TABLES

1-3-1 Total P Removal Efficiencies for BMPs Suitable for Development and Redevelopment in the City of Newport News 1-3-4
1-3-2 BMP Efficiency Requirements 1-3-5
1-3-3 Average Watershed Loadings of Total P: "Average Land Cover" Conditions in the City of Newport News 1-3-7
1-3-4 BMP Technology Criteria Matrix for New Development 1-3-11
1-3-5 Acceptable BMP Technology Checklist (City of Newport News) 1-3-12
1-3-6 Supplemental BMP Requirements for Wet Detention BMPs (Development within Water Supply Watersheds) 1-3-17
1-3-7 Supplemental BMP Requirements for Wet Detention BMPs (Development outside Water Supply Watersheds) 1-3-18
1-3-8 Supplemental BMP Requirements for Extended Dry Detention BMPs 1-3-19
1-3-9 Supplemental BMP Requirements for Modified Extended Dry Detention BMPs 1-3-20
1-3-10 Supplemental BMP Requirements for Infiltration BMPs (Development Projects that are Less than Five Acres) 1-3-21
1-3-11 BMP Requirements for Redevelopment Projects (CBLAD 10-Percent Reduction Standard) 1-3-23
1-3-12 Recommended Maximum Water Depths for Emergent Wetland Plant Species 1-3-45
1-3-13 Permissible Velocities for Various Ground Covers 1-3-64
1-3-14 Manning's Roughness Coefficient ("n" Value) for Vegetation 1-3-70
1-3-15 Supplemental BMP Efficiency (Total P Removal) Required for Different Buffer Zone Lengths in Chesapeake Bay Resource Protection Areas (RPAs) 1-3-70

FIGURES

1-3-A BMP Performance Criteria Curves for Use in the City of Newport News . . . 1-3-10
1-3-B Schematic of Wet Detention Basin BMP 1-3-26
1-3-C Schematic of Extended Dry Detention Basin BMP (Two-Stage Design) 1-3-33
1-3-D Schematic of Perforated Riser Outlet for Extended Dry Detention Basin . . . 1-3-38
1-3-E Schematic of Modified Extended Dry Detention Basin BMP 1-3-41
1-3-F Typical Application of Infiltration Trench with Stone Surface 1-3-51
1-3-G Grate and Perforated Inlet for Infiltration Trench with Vegetated Surface . . . 1-3-52
1-3-H Schematic of Dry Well BMP 1-3-53
1-3-I Infiltration Trench with Observation Well Detail (Cross-section) 1-3-56
1-3-J Grassed Swale with Check Dams (Schematic) 1-3-59
1-3-K Grassed Swale with Check Dams (Detail) 1-3-60
1-3-L Grassed Swale with Check Dams (Views) 1-3-61
1-3-M Biofiltration Schematic 1-3-66

PLATES

None

Chapter 1

STORMWATER MANAGEMENT

Part One
OVERVIEW

1.0 REGULATIONS

This chapter presents design criteria for storm drainage systems and best management practices (BMPs) which must be provided by all new development and redevelopment in the City to comply with stormwater control regulations. The following regulations are addressed by the BMP requirements in this chapter:

a. U.S. Environmental Protection Agency (EPA) National Pollutant Discharge Elimination System (NPDES) Regulations which establish a permitting program for stormwater discharges in cities and urbanized counties with populations of 100,000 or greater;

b. State of Virginia Stormwater Management Regulations (VR 215-02-00) which are implemented by Article IV, Chapter 37.1, *Newport News City Code*. The chapter specifies both runoff quantity and water quality control requirements for all new development and redevelopment.

c. State of Virginia Chesapeake Bay Preservation Area Designation and Management Regulations (VR 173-02-01) which are implemented by Article V, Chapter 37.1, *Newport News City Code*.

d. City Reservoir Protection Ordinance (Chapter 42, *Newport News City Code)* which specifies control requirements that apply for new stormwater pollution discharges within the City water supply watersheds.

1.1 NPDES REGULATIONS

The thrust of the NPDES Regulations, which are administered by the Virginia Department of Environmental Quality (DEQ), is to reduce stormwater pollution discharges to the "Maximum Extent Practicable" (MEP). The City NPDES Stormwater Management Program covers four major areas:

a. A program to control stormwater pollution discharges from commercial and residential development (this program covers most of the City land area and is the most important element in the NPDES program).

b. Control programs for illegal discharges to the City storm drainage system.

c. A program to monitor the DEQ NPDES permit program for industries (as defined in the NPDES regulations) which discharge to the City storm drainage system.

d. An improved inspection and enforcement program for erosion and sediment controls at construction sites in the City.

1.2 STATE STORMWATER MANAGEMENT REGULATIONS

The State Stormwater Management Regulations, which are administered by the Virginia Department of Conservation and Recreation (VDCR), constitute the principal legal authority for the City NPDES program for commercial and residential areas. The State regulations specify both runoff quantity and quality criteria which must be provided to control stormwater pollution discharges from all development.

1.3 CHESAPEAKE BAY REGULATIONS

Chesapeake Bay regulations require the control of stormwater pollution discharges from new development and redevelopment within designated Chesapeake Bay management areas in the City. These regulations require that new development provide BMPs to reduce the post-development stormwater discharges of total phosphorus (total P) to the pre-development loading based upon "average land cover conditions." Total P has been designated by the Virginia Chesapeake Bay Local Assistance Department (CBLAD) as the "keystone" pollutant for the Chesapeake Bay management program. The Chesapeake Bay regulations also require redevelopment projects to achieve a 10 percent reduction in the total P loading compared to the existing stormwater load from the site.

1.4 CITY RESERVOIR PROTECTION ORDINANCE

The City Reservoir Protection Ordinance requires new development in City water supply watersheds to provide BMPs to control stormwater pollution discharges. Following approval of a runoff control plan for the development project, the Director issues a runoff control permit. Wet detention BMPs have been identified by the City as the preferred BMP for development in water supply watersheds.

1.5 CHAPTER RESTRICTIONS

This chapter is restricted to BMP requirements for post-development conditions. It does not address management practices to be implemented at new development sites during the construction phase. Construction site BMPs are required by the State Erosion and Sediment Control Regulations (VR 625-02-00). Criteria for construction site BMPs and other management practices to control soil erosion and sediment deposition from construction sites are presented in the *Virginia Erosion and Sediment Control Handbook* published by the VDCR.

(Sections 1.6 through 1.19 are reserved. Section 1.20 is next.)

STORMWATER MANAGEMENT

Part Two
WATER QUANTITY CONTROL

1.20 GENERAL

The criteria established in this Part reflect minimum acceptable standards of design for storm drainage systems under typical conditions. It shall be the designer's responsibility to determine if exceptional conditions exist, thus requiring the use of materials and methods over and above those specified.

1.20.1 Design Principles. The design of drainage systems shall conform to the following:

a. Designs shall meet or exceed all current Federal, State and City regulatory requirements.

b. Designs shall conform to approved Best Management Practices (BMPs).

c. To avoid piecemeal designs, drainage systems shall be designed to complement one another.

d. Designs shall not adversely affect existing off-site systems.

e. Satisfactory solutions to known drainage problems shall be proposed, rather than transferring problems to another location along the system.

1.20.2 Drainage System Elements. Systems shall be designed to protect property of all classes against flooding and to maintain the required level of service for public facilities as specified in Table 1-2-1. The design shall be based on criteria established in this chapter and subject to the final determination and approval of the Director. The system shall be designed as a coordinated unit and may include any or all of the following elements:

a. An ***Enclosed System***, which consists of one or more pipes connecting two or more structures (for example, drop inlets and manholes) and shall be used to collect/convey stormwater runoff.

b. An ***Open System***, which consists of roadside and median ditches, swales and open channels, which shall be either triangular or trapezoidal in shape.

c. A ***Culvert***, which consists of one or more pipes or structures and shall be provided where an open system crosses the public right-of-way.

d. A ***Retention/Detention Facility***, which consists of a number of practices and techniques (for example, impoundments and parking lot storage) used to manage both the quantity and quality of urban stormwater runoff.

1.20.3 Design Storm Frequency. Recognizing that floods cannot be precisely predicted and it is seldom economically feasible to design for the very rare flood, all designs shall be reviewed for the extent of probable damage should the design storm be exceeded. Minimum design frequency values that shall be used are listed in Table 1-2-1. In addition, a frequency determination shall be based upon but not be limited to the following considerations:

a. Potential damage to adjacent property.

b. Potential damage to hydraulic structures.

c. Potential hazards to human life.

d. Potential damage to stream and flood plain environments

.

Table 1-2-1

MINIMUM STORM FREQUENCIES FOR USE IN DESIGN

A. ENCLOSED SYSTEMS:	
Interstate	50-year minimum
Primary and Secondary	10-year minimum (non-depressed roadways) 50-year minimum (depressed roadways)
Residential, commercial and industrial	10-year minimum
B. OPEN SYSTEMS:	
Roadside and median ditches	Capacity - 10-year minimum
Channels	Capacity - 10-year minimum Protective lining - 2-year minimum
C. CULVERTS:	
Interstate	50-year minimum
Primary	25-year minimum
Secondary	10-year minimum
Residential, commercial and industrial	10-year minimum
D. RETENTION/DETENTION FACILITIES:	
Residential, commercial and industrial	two-, 10- or 25-year (one or more of the listed frequencies, depending on the adequacy of the off-site receiving system).

NOTE: A design frequency that is higher than those listed in this table may be required by the Director, depending on location, safety, damage risks, etc.

1.20.4 Flood Magnitude Estimates:

a. One of the most difficult phases of drainage design is that of determining a design runoff. There are several methods available and, consequently, the designer must be familiar with the general sources of the various methods and their applications and limitations. It shall be the responsibility of the designer to examine all methods that apply to a particular site and to make the decision as to which discharge is the most appropriate. The application of sound engineering judgment and the provision of complete documentation is emphasized.

b. Time of concentration and storm duration are both critical factors in determining potential flood magnitude. Hence, several values shall be tried in order to determine which is most critical to the particular site.

c. The diagram shown in Figure 1-2-A, though not all-inclusive of the various methods available, provides a minimum acceptable guide for the application of methods based on drainage area.

1.20.5 Computer-Aided Design. The use of computer programs for design of storm drainage systems is acceptable, provided the program logic is consistent with established design procedures and site conditions. The Director may request a copy of the user's manual in order to verify methodology and design assumptions. **Complete input data and the resulting output (printed copy) shall be submitted for review.**

1.20.6 Easements. Easements required by and conveyed to the City shall be used exclusively for drainage and utilities that are maintained by the City. Other utilities, such as gas, electricity, telephone, cable, etc., shall not be installed in these easements without the express, written approval of the Director.

Figure 1–2–A

GUIDELINE FOR APPLICATION OF VARIOUS METHODS BASED ON DRAINAGE AREA

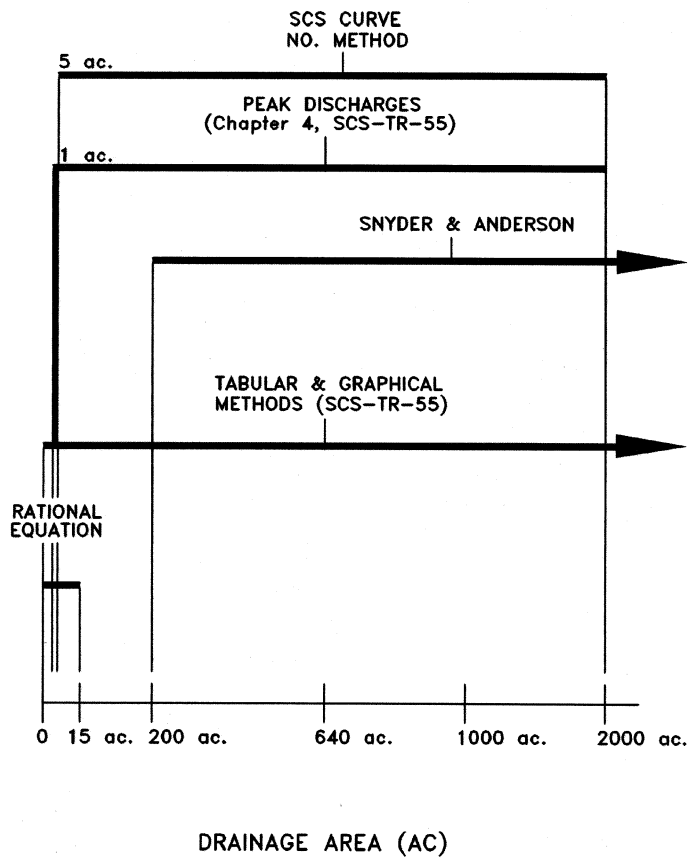

NOTE: The above diagram, though not all–inclusive of the various methods available, provides a minimum acceptable guide for the application of methods.

1.21 DESIGN PROCEDURE

1.21.1 Maps and Surveys. The designer shall obtain the latest topographic maps and other plans showing the tributary area for which the drainage system is being designed. All plans and surveys shall be based on the datum established by the City's benchmark system. The City's topographic maps may be used to establish general contour elevations for preliminary plan submittal; however, the final plan shall be based on actual, detailed field survey information showing spot elevations and contours for both existing and proposed conditions.

1.21.2 Existing Utilities and Information. In the area of the existing or proposed drainage system, all utilities shall be located in the field and noted on the plan to avoid conflicts between the existing utilities and the future drainage system. This information shall be extended well beyond the limits of the proposed project, both laterally and longitudinally.

1.21.3 Ultimate Development. Using information obtained from the Department of Engineering and the Department of Planning and Development, the designer shall compute the estimated ultimate density and impervious surfaces of the entire drainage area for use in runoff computations.

1.21.4 Runoff Determination. The designer shall compute both pre- and post-development runoff using one of the applicable methods listed in Figure 1-2-A. Determine and show the ridge lines for the runoff area(s) and indicate cubic feet per second by increment at each point of interception and access to the system or at points of discharge from the site.

1.21.5 Preliminary Layout. The designer shall prepare a preliminary layout with two-foot contours (existing and proposed) in which the proposed drainage pattern must be compatible with the existing pattern. Verify the location and size of connecting storm sewer lines, appurtenances, street grades and all other information pertaining to the proposed drainage system.

1.21.6 Erosion and Sedimentation Control. An erosion and sedimentation control plan for all land-disturbing activities shall be prepared and submitted for approval as established in Chapter 35, "Soil Removal and Other Land-Disturbing Activities," of the *Newport News City Code*. Plans shall be developed and work

constructed in accordance with the latest edition of the *Virginia Erosion and Sediment Control Handbook*.

1.21.7 Flood Plain Development:

a. Approval shall be required for all proposed construction on or improvements to land within any flood hazard district as established in the Zoning Ordinance. The owner shall provide a hydrologic and hydraulic study of proposed developments, and the study shall contain but not be limited to the following:

(1) Documentation of the elevation and location of the 100-year flood contours for pre- and post-development conditions.

(2) Evaluation of the total effects that the proposed development will have on existing developments, drainage facilities and properties upstream and downstream from the proposed development.

b. Studies must show that the proposed development will not create or worsen drainage problems upstream or downstream from the proposed development and that the 100-year water surface elevation will not increase by more than one foot at any point in the floodway due to encroachments within the floodway fringe (refer to Figure 1-2-B).

1.21.8 Environmentally Sensitive Areas:

a. Development plans or land-disturbing activities proposed within environmentally sensitive areas, such as "Reservoir Protection Districts" and "Chesapeake Bay Preservation Areas" as shown in Figure 1-2-C shall comply with provisions of the respective ordinances. The Department of Planning and Development shall review proposed plans to ensure proper delineation of CBPA boundaries, and the Department of Engineering shall ensure overall compliance with the provisions of the ordinance.

Figure 1–2–B

FLOODWAY SCHEMATIC

NO SCALE

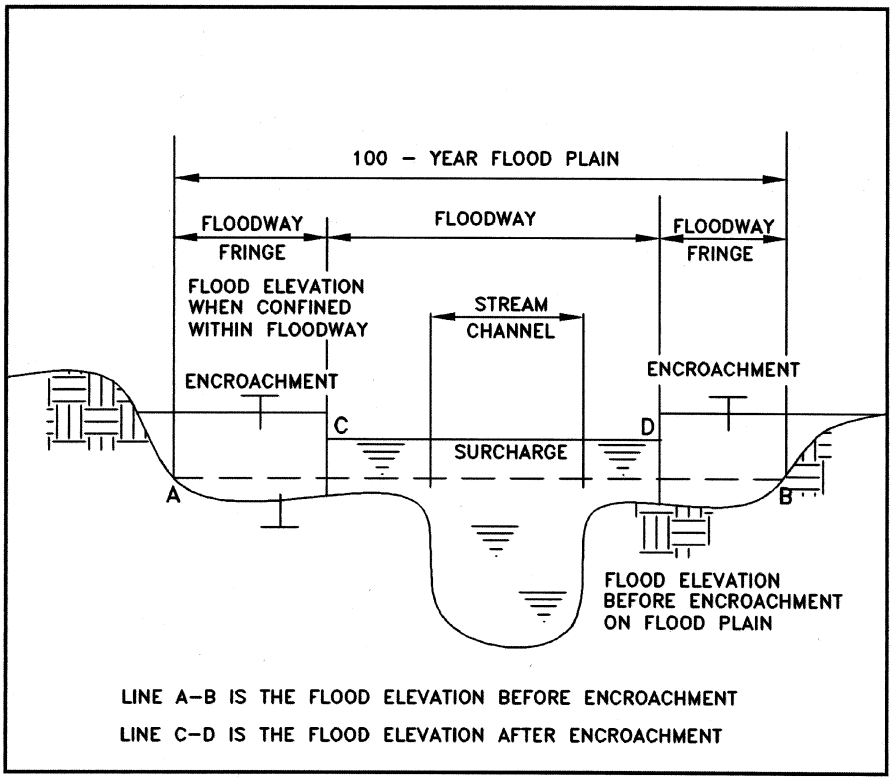

NOTE: Surcharge not to exceed one foot (Flood Insurance Administration requirement) or lesser amount if specified by State.

Figure 1-2-C

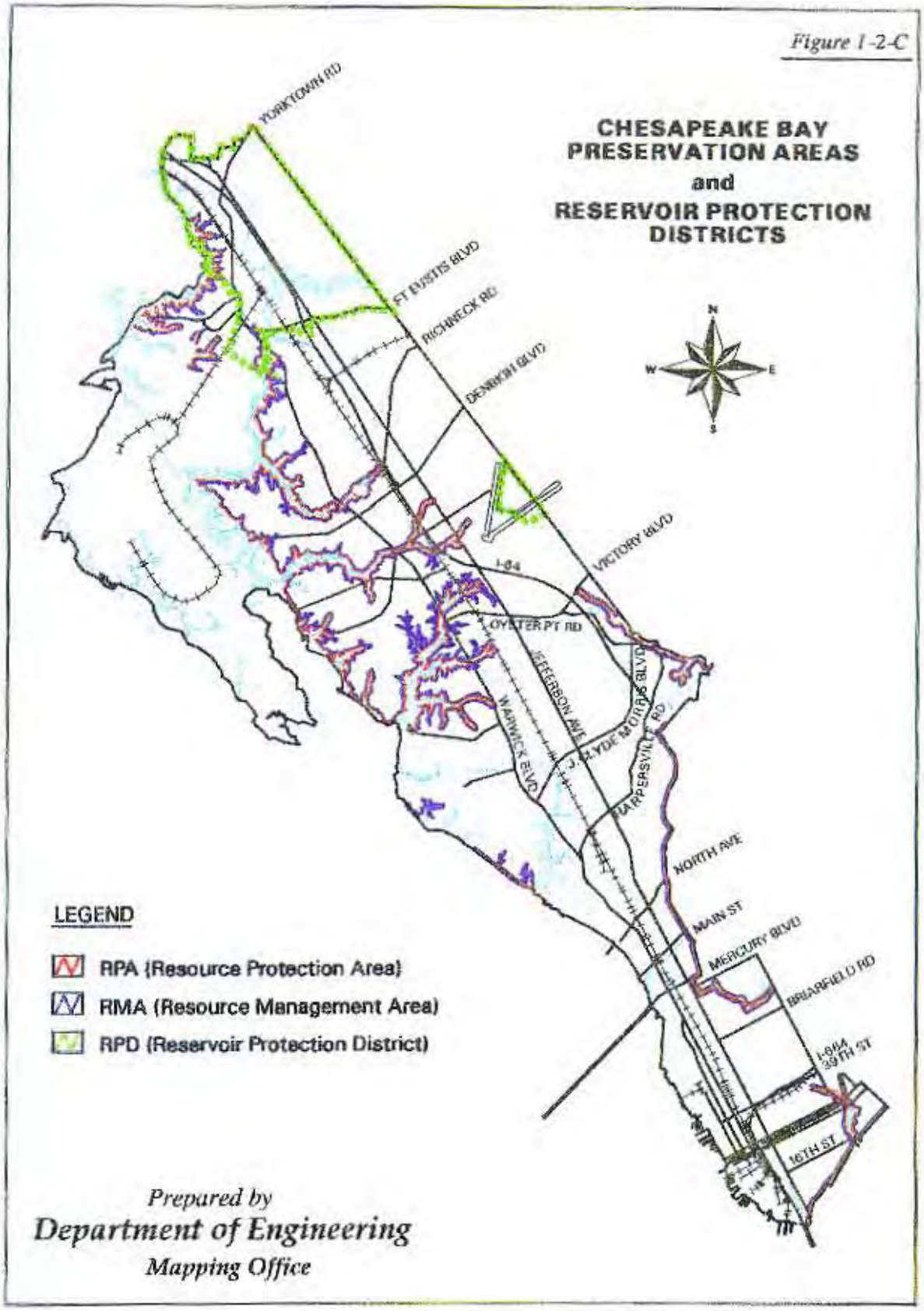

Prepared by
Department of Engineering
Mapping Office

b. Approval granted by the Director for development plans is for compliance with the *Newport News City Code* and local ordinances, policies and programs only. Additional approvals from State or Federal agencies may be required, and the designer shall ensure that all permits and approvals are granted by the appropriate agency prior to construction.

1.21.9 SWM Criteria Applicability:

a. Stormwater management criteria shall apply to all development and land-disturbing projects, except as noted in the Stormwater Control Regulations. For residential subdivision projects, the criteria shall apply to the entire subdivision development. **Runoff rate and channel adequacy must be verified with engineering calculations.**

b. The objectives of stormwater management (control of off-site erosion and flooding) can be achieved by maintaining runoff after development at a rate equivalent to that occurring prior to development or to the existing capacity of the off-site receiving system, whichever is more stringent. For these purposes, both the two-year (erosion control) and the 10-year (flood control) design storm frequencies shall be used to evaluate a development's runoff contribution to the off-site receiving system.

c. Concentrated stormwater runoff from a development site must be discharged directly into an adequate natural or man-made receiving channel or pipe. Each receiving channel or pipe shall be tested for adequacy. The receiving system may be considered adequate for stormwater management purposes if the following conditions can be satisfied:

(1) For natural or man-made channels, the post-development flow from a 10-year (minimum) frequency storm will not overtop the banks and the post-development flow from a two-year storm will not exceed the permissible non-erodible velocity of the channel lining.

(2) For pipes and storm sewer systems, the post-development flow from a 10-year (minimum) frequency storm will be contained within the pipe or system.

d. If an existing off-site receiving system is not an adequate system as determined through the above tests for flood or erosion control, the applicant must choose one of the following options:

(1) Obtain easements from downstream property owners, where applicable, to improve the receiving channel or pipe to an adequate condition for the two- and 10-year storm in accordance with the previous sub-section. Such improvements shall extend downstream until an adequate system is reached.

(2) Develop a site design that will not cause the pre-development peak rate of runoff from the two-year and/or the 10-year storm to increase or exceed the capacity of the existing off-site receiving system, whichever is the more stringent. Such a design may be accomplished by providing on-site stormwater detention measures. If stormwater detention is chosen, a plan for the continued maintenance of the detention facility shall be provided as detailed in Part Three of this chapter.

(3) Provide a combination of channel improvements and stormwater detention that is satisfactory to the Director.

1.22 ENCLOSED SYSTEMS

1.22.1 Inverts. Invert elevations shall be determined on all pipes entering or leaving drop inlets, catch basins, manholes, etc. The inverts of all manholes and inlets shall be constructed according to Virginia Department of Transportation (VDOT) IS-1 (Inlet Shaping), and this shall be clearly indicated on all plans.

1.22.2 Pipe:

a. Minimum pipe diameter shall be 15 inches. Pipes shall be sized in an analysis independent from that which locates inlets. Normally, one proceeds from the upland area toward the outlet, setting pipes at minimum depth consistent with profile constraints and hydraulic grade line.

b. Manning's Formula. Pipes are sized to flow just full at the design peak flow in accordance with Manning's formula:

$$Q = (1.486/n)AR^{2/3}S^{1/2}$$; where:

n = roughness coefficient
A = area of pipe
R = hydraulic radius, which is obtained by dividing the area of pipe by the wetted perimeter of pipe
S = pipe slope (assuming uniform flow)

Note: The minimum values of "n" that shall be used in the design of pipes are listed in Table 1-2-2.

c. Drainage systems shall be designed to maintain self-cleaning velocities. A minimum velocity of three feet per second, where practical, and a maximum velocity of 15 feet per second, when flowing full, are specified. The design procedure shall include a check to ensure that self-cleaning velocities will be achieved.

1.22.3 Access Points. The distance between points of access in a storm sewer system shall be limited to 150 feet where the pipe diameter is 15 inches, 300 feet where the pipe diameter is 18 to 42 inches, and 800 feet where the pipe diameter is 48 inches or larger. It is mandatory that access be provided at all pipe junctions and bends.

1.22.4 Depth. A minimum cover of two feet should be maintained wherever possible. Design consisting of multiple or low head pipes or special bedding shall be provided where cover is decreased below two feet.

1.22.5 Hydraulic Grade Line. A hydraulic grade line (water surface profile) shall be determined for the entire system and shown on the plan. The grade line shall not rise above the top of junction facilities (for example, manholes and yard drains) or the flowline in curb and gutter sections.

1.22.6 Material. Concrete pipe is the standard. The use of metal and plastic pipes shall be subject to approval on a case-by-case basis for drainage systems to be accepted by the City. These pipes shall not be permitted in areas subject to traffic loadings and each shall be evaluated for possible floatation. Metal pipe shall not be permitted in salty or brackish water environments. Sufficient tests to determine the soil pH level throughout the project area shall also be provided when metal pipe is proposed.

1.22.7 Pipe Bedding. The standard is select material bedding placed in accordance with Method A of VDOT *Road and Bridge Standards*. Soil borings shall be taken at the project site, and the designer shall determine from them the need for special pipe bedding and backfill. For foundations of soft, yielding or otherwise unsuitable materials, coarse aggregate #57 or #68 shall be used.

Table 1-2-2

MINIMUM VALUES OF "n" FOR USE IN PIPE DESIGN

CONCRETE PIPE	**0.013**
PVC STORM DRAIN PIPE	**0.010**
CORRUGATED STEEL AND ALUMINUM PIPE OR PIPE ARCH	**(See Below)**

Corrugations	Annular 2 2/3" X 1/2"	HELICAL											
		2 2/3" x 1/2"											
	All Diameters	15"	18"	24"	36"	48"	60" and Larger						
Unpaved 25% Paved Fully Paved	.024 .021 .012	.012	.014	.016 .015 .012	.019 .017 .012	.020 .020 .012	.021 .019 .012						
	Annular 3" X 1"	Helical -- 3" X 1"											
						48"	54"	60"	66"	72"	78" and Larger		
Unpaved 25% Paved Fully Paved	.027 .023 .012					.023 .020 .012	.023 .020 .012	.024 .021 .012	.025 .022 .012	.026 .022 .012	.027 .023 .012		
Corrugations 6" X 2"								60"		72"		120"	180"
Plain - Unpaved 25% Paved								.033 .028		.032 .027		.030 .026	.028 .024

1.22.8 Inlets:

a. The Rational Equation, applied with judgment, is satisfactory for estimating flows in the design spacing of inlets. For residential, commercial and industrial developments, a rainfall intensity (I) of 3.5 inches per hour shall be used to determine spread and curb-opening length.

b. Inlets shall be spaced so as to limit the spread of water on the pavement to a pre-determined amount that will not interfere with traffic or pedestrians at designated crosswalks as follows:

(1) For curb or curb and gutter sections, the inlet spacing shall be sufficient to limit the spread of water to one-half the width of the travelway in each direction or eight to 10 feet from the face of curb, whichever is less.

(2) For pedestrian crosswalks, a spread of two feet shall be the maximum allowed.

c. Where an inlet is located on a continuous grade, the flow bypassing that inlet shall be included in the total gutter flow contributing to the next inlet downstream unless the flow is diverted or intercepted.

d. To properly drain a sump or low point, a check of the width spread approaching the low point from each direction where the gutter grade is one-tenth of a percent is required.

e. Curb opening inlets shall be designed and spaced to pick up 85 to 90 percent of the gutter flow.

f. After having located the inlets for the suggested design storm, the designer shall check for excessive flooding and adjust the spacing accordingly.

1.22.9 Easement Requirement. For enclosed drainage systems, the easement width shall be a minimum of 15 feet and shall increase in increments of five feet as determined by the Director based upon pipe size, depth of installation and adjacent physical or topographic conditions.

1.23 OPEN SYSTEMS

There are many facets involved and various techniques employed in the design of open channels, and it shall be the responsibility of the designer to be familiar with them and their sources, application and practicality.

1.23.1 Design Factors:

a. Open systems will be considered for approval on a case-by-case basis but only where the required concrete pipe diameter exceeds 60 inches or the following conditions are deemed to exist by the Director, whose decision shall be final:

(1) Shallow ground cover or flat outfall slopes preclude installation of an efficient enclosed system.

(2) A potential flooding hazard to the public is not created.

(3) A 100-year storm can be confined within the proposed channel limits.

b. In the design of an open system, three prime concerns shall govern as follows:

(1) The system shall carry its design storm flows without overtopping.

(2) The system shall carry its design storm flows without excessive erosion.

(3) The system shall be economically constructed and maintained.

c. The minimum design storm frequencies shall be as previously mentioned. Documentation of existing conditions, the design of a proposed facility and analyses of the effects a proposed change will exert on existing conditions shall be provided. A determination of water surface profile, velocity and flow distribution in individual reaches of the channel shall also be provided by the designer. Modified or relocated channels shall duplicate the existing stream and flood plain characteristics as nearly as possible and this shall be done in accordance with the current edition of *Best Management Practices for Hydrologic Modifications*.

1.23.2 Swale. Concrete swales shall be the standard of design and shall be provided along rear property lines draining more than one lot, with an appropriate easement. Earth swales shall be considered on a case-by-case basis. The depth of a concrete swale shall be between a minimum of six inches and a maximum of 18 inches below adjacent ground at its centerline. All other open drainageways are considered to be ditches or channels.

1.23.3 Connection. Structures, such as pipes, box culverts, etc., that enter a channel shall not project into the normal waterway area.

1.23.4 Velocity. The computed velocity of the proposed channel shall be compared to the maximum allowable velocity associated with the selected channel lining so as to ensure an erosion-resistant design. Open drainage systems shall be required to incorporate low maintenance liners (for example, concrete and rip rap) if channel velocities exceed maximum permissible velocities as shown in Table 1-2-3. Liner designs shall include provisions to prevent undermining. All rip rap linings (grouted or ungrouted) shall be placed on filter fabric. See Table 1-2-4 for values of Manning's roughness coefficients used in the design of open systems. The designer shall furnish information pertaining to soil types and design flow velocities.

1.23.5 Capacity. Open channels shall be sized to carry design flow rates with a minimum freeboard of one and one-half feet.

1.23.6 Cross-sections. Channel cross-sections shall be compatible with the type of lining and maintenance practice to be used for upkeep. The designer shall submit documentation to support the design. In general, channel side slopes stabilized with vegetative ground cover shall not be steeper than 2:1 (horizontal to vertical); however, a final determination by the Director of acceptable side slopes will be based upon channel size, soil type and proposed lining.

1.23.7 Easement Requirement. The minimum easement width shall be 15 feet, and this shall increase in accordance with the following:

a. For open systems (excluding swales) with a top width of five feet or less, easement width shall be 20 feet, including a 15-foot access easement on one side.

Table 1-2-3

MAXIMUM PERMISSIBLE CHANNEL VELOCITIES

PERMISSIBLE VELOCITIES FOR CHANNELS WITH ERODIBLE LININGS, BASED ON UNIFORM FLOW IN CONTINUOUSLY WET, AGED CHANNELS (1)

Soil type or lining (earth; no vegetation)	Maximum permissible velocities (in f.p.s.) for --		
	Clear Water	Water carrying fine silts	Water carrying sand and gravel
Fine sand (noncolloidal)	1.5	2.5	1.5
Sandy loam (noncolloidal)	1.7	2.5	2.0
Silt loam (noncolloidal)	2.0	3.0	2.0
Ordinary firm loam	2.5	3.5	2.2
Volcanic ash	2.5	3.5	2.0
Fine gravel	2.5	5.0	3.7
Stiff clay (very colloidal)	3.7	5.0	3.0
Graded, loam to cobbles (noncolloidal)	3.7	5.0	5.0
Graded, silt to cobbles (colloidal)	4.0	5.5	5.0
Alluvial silts (noncolloidal)	2.0	3.5	2.0
Alluvial silts (colloidal)	3.7	5.0	3.0
Coarse gravel (noncolloidal)	4.0	6.0	6.5
Cobbles and shingles	5.0	5.5	6.5
Shales and hard pans	6.0	6.0	5.0

(1) As recommended by Special Committee on Irrigation Research, American Society of Civil Engineers, 1926.

PERMISSIBLE VELOCITIES FOR CHANNELS LINED WITH UNIFORM STANDS OF VARIOUS GRASS COVERS, WELL MAINTAINED (1) (2)

Cover	Slope range (percent)	Permissible velocity on --	
		Erosion resistant soils (f.p.s.)	Easily eroded soils (f.p.s.)
Bermudagrass	0-5	8.0	6.0
	5-10	7.0	5.0
	Over 10	6.0	4.0
Buffalograss Kentucky bluegrass Smooth brome Blue gama	0-5	7.0	5.0
	5-10	6.0	4.0
	Over 10	5.0	3.0
Grass mixture	0-5	5.0	4.0
	5-10	4.0	3.0
Lespedeza serioea Weeping lovegrass Yellow bluestem Kudzu Alfalfa Crabgrass	0-5	3.5	2.5
Common lespedeza (3) (4) Sudangrass	0-5	3.5	2.5

(1) From "Handbook of Channel Design for Soil and Water Conservation."
(2) Use velocities over five f.p.s. only where good covers and proper maintenance can be obtained.
(3) Annuals, used on mild slopes or as temporary protection until permanent covers are established.
(4) Use on slopes steeper than five percent is not recommended.

Table 1-2-4

MANNING'S ROUGHNESS COEFFICIENTS

MATERIAL	"n" VALUE
I. Closed conduits:	
A. Asbestos-cement pipe	0.011-0.015
B. Brick	0.013-0.017
C. Cast iron pipe (cement-lined and seal-coated)	0.011-0.015
D. Concrete (monolithic):	
1. Smooth forms	0.012-0.014
2. Rough forms	0.015-0.017
E. Concrete pipe	0.011-0.015
F. Corrugated-metal pipe (1/2" x 2 1/2" corrugations):	
1. Plain	0.022-0.026
2. Paved invert	0.018-0.022
3. Spun asphalt-lined	0.011-0.015
G. Plastic pipe (smooth)	0.011-0.015
H. Vitrified clay:	
1. Pipes	0.011-0.015
2. Liner plates	0.013-0.017
II. Open channels:	
A. Lined channels:	
1. Asphalt	0.013-0.017
2. Brick	0.012-0.018
3. Concrete	0.011-0.020
4. Rubble or riprap	0.020-0.035
5. Vegetal	0.030-0.400
B. Excavated or dredged:	
1. Earth, straight and uniform	0.020-0.030
2. Earth, winding, fairly uniform	0.025-0.040
3. Rock	0.030-0.045
4. Unmaintained	0.050-0.140
C. Natural channels (minor streams, top width at flood stage < 100 ft):	
1. Fairly regular section	0.030-0.070
2. Irregular section with pools	0.040-0.100

Manning's formula:

$$Q=(1.486/n)AR^{2/3}S^{1/2}$$

Source: ***Design and Construction of Urban Stormwater Management Systems***; American Society of Civil Engineers (ASCE) Manuals and Reports of Engineering Practice No. 77 and Water Environment Federation (WEF) Manual of Practice FD-20. Used by ASCE and WEF permission.

b. For open systems with a top width from five to 15 feet, easement width shall be a minimum of 20 feet greater than the top width of the ditch or channel, including a 15-foot access easement on one side.

c. For open systems with a top width greater than 15 feet, easement width shall be a minimum of 30 feet greater than the top width, including a 15-foot access easement on each side.

1.24 CULVERTS

Culverts shall accommodate the previously listed flood frequencies for fully developed conditions. Culvert flows are under either inlet or outlet control, and designers shall be familiar with all aspects of both. The design criteria for outlet velocity and buoyancy failure contained in Chapter 3 of the VDOT *Drainage Manual* shall be used.

1.24.1 100-Year Flood. To comply with the National Flood Insurance Act, the 100-year flood shall be considered at all locations where construction will encroach on an established 100-year flood plain or 100-year water surface profile.

1.24.2 Minimum Culvert Size. The minimum sizes of main line culverts shall be 24 inches for interstate roadways and 15 inches for primary, secondary, residential, commercial, and industrial roadways. In no case shall a culvert be smaller than required to convey the anticipated runoff.

1.24.3 Freeboard. A minimum freeboard of one and one-half feet will be provided to safeguard existing or proposed structures.

1.25 DETENTION FACILITIES

The development of watersheds generally causes an increase in the peak rate of stormwater runoff. Temporary storage or detention of runoff is a stormwater management technique that is often used to attenuate peak flows. In the design of new developments (for example, residential and commercial) where a detention facility is either required or desired, the specific approval of the Director shall be required.

1.25.1 Hydrographic Analysis:

a. There are many methods available for hydrographic analysis. Any established method will be acceptable within the limitations of the method used. Examples of acceptable methods include:

- Modified Rational Method.
- SCS Tabular Method.
- SCS Unit Hydrograph Method.
- SCS Peak Discharge Method.

b. Approximate flood routing techniques may be used to determine storage volumes during preliminary stages of design. However, the Storage Indication Routing Method shall be used to verify adequacy of the final design.

1.25.2 Design Criteria:

a. Design storm frequencies as previously mentioned are further explained in this section. Additional guidelines based on flood control experiences are also explained.

(1) When required, detention ponds shall be designed to limit post-development runoff to pre-development levels, depending on the adequacy of the off-site receiving system as determined in this chapter, for one or more of the following frequencies: two-, 10- or 25-year storm.

(2) No flow from the above design storms shall be allowed to pass through the emergency spillway. That is, each storm must be completely routed through the principal spillway and the resulting headwater shall remain below the emergency spillway crest.

(3) The facility and its outlet works shall be checked for possible damage resulting in the passage of the 100-year storm.

b. For Soil Conservation Service (SCS) methods, a 24-hour storm duration shall be used with an incremental computational time (t) of 30 minutes or less. When using the Modified Rational or similar methods, several storm durations shall be evaluated in order to determine the critical storm duration.

c. The U.S. Department of Commerce *Rainfall Frequency Atlas of the United States* (TP-40) may be used to determine point rainfall amounts.

d. One foot of freeboard with the emergency spillway flowing at design depth shall be provided from the maximum routed design storm (100-year) water elevation to the minimum elevation on top of the pond embankment.

e. The outlet works shall not include any mechanical components and shall function without requiring attendance or control during operation.

f. The detention facility shall be designed to accept stormwater runoff from the entire tributary area, regardless of land ownership.

1.25.3 Impoundment Types. Stormwater detention impoundments can vary greatly in size and design. For a relatively small area, such as a parking lot, a "dry pond" is often used. A "wet pond" can also be used for stormwater detention and is the preferred BMP for water quality control. Structural design criteria for these facilities shall be in accordance with Part Three of this chapter. The outlet works can be designed as dual-purpose devices to obtain both runoff quantity and water quality control.

1.25.4 Data Submittal. In addition to complete plans, the following data shall be provided to the Director for approval on all projects that include detention facilities:

a. The inflow hydrograph in either tabular or graphical form, along with supporting computations and detailed methodology. The outflow hydrograph resulting from the detail routing procedure shall also be provided.

b. Storage volume data for the impoundment and the discharge rating curve data for the outlet works in either tabular or graphical form.

1.25.5 Easement Requirement. It shall be the general policy of the City not to accept maintenance responsibility for detention facilities. Land draining to a detention facility shall be limited to "non-public" areas. In the event that the City determines that it is not practical to meet that objective, easements through the facility shall be required to convey "public water." Such easements shall

include all necessary provisions and land for the City's right-of-entry for inspection and structural maintenance purposes. The specific easement requirement shall be determined on a case-by-case basis.

1.26 DESIGN DOCUMENTS

1.26.1 Plan. The plan view of all drainage system designs shall indicate the proper location of the storm sewer, appurtenances, size of line, top elevation of structure, invert elevations and other details relating to the system. The plan shall show sufficient detail, to include exact locations, proper ties into existing permanent reference points, and proper angles and distances from utilities presently or to be placed in the street right-of-way.

1.26.2 Profile. The profile of drainage systems shall show existing and proposed slopes and street grades, locations of angles and appurtenances, and proper elevations for existing outfall ditches. It shall also show the size of the line, elevations, hydraulic grade line, and existing utilities.

1.26.3 Data Submittal. Along with complete plans, documentation verifying the design shall be provided to the Director for review. This documentation shall include but not be limited to the following:

a. Storm sewer design computations, using the Rational Method and design aids presented in Figures 1-2-D through 1-2-G.

b. Hydraulic grade line and storm sewer inlet design computations, using methods described in Chapter 4 of the VDOT *Drainage Manual*.

1.26.4 Design Checklist. The checklist shown in Figure 1-2-H shall be used to ensure all items are considered in the design of stormwater management facilities. A copy of the completed checklist shall be attached to all design documents provided for review.

Figure 1-2-D

RUNOFF COEFFICIENTS

BUSINESS, INDUSTRIAL AND COMMERCIAL	0.80 to 0.90
APARTMENTS	0.65 to 0.75
SCHOOLS	0.50 to 0.60
RESIDENTIAL – LOTS 10,000 sq. ft.	0.40 to 0.50
– LOTS 12,000 sq. ft.	0.40 to 0.45
– LOTS 17,000 sq. ft.	0.35 to 0.45
– LOTS 1/2 acre or more	0.30 to 0.40
PARKS, CEMETERIES AND UNIMPROVED AREAS	0.20 to 0.35
PAVED AND ROOF AREAS	0.90
CULTIVATED AREAS	0.50 to 0.70
PASTURE	0.35 to 0.45
FOREST	0.20 to 0.30
STEEP GRASS (2:1)	0.70
SHOULDER AND DITCH AREAS	0.50
LAWNS	0.20

NOTE: The listed coefficients or "C Values" are to be used in computing weighted coefficients and "CA Values".

Figure 1-2-E

RAINFALL INTENSITY CHART

FOR USE IN THE CITY OF NEWPORT NEWS

NO SCALE

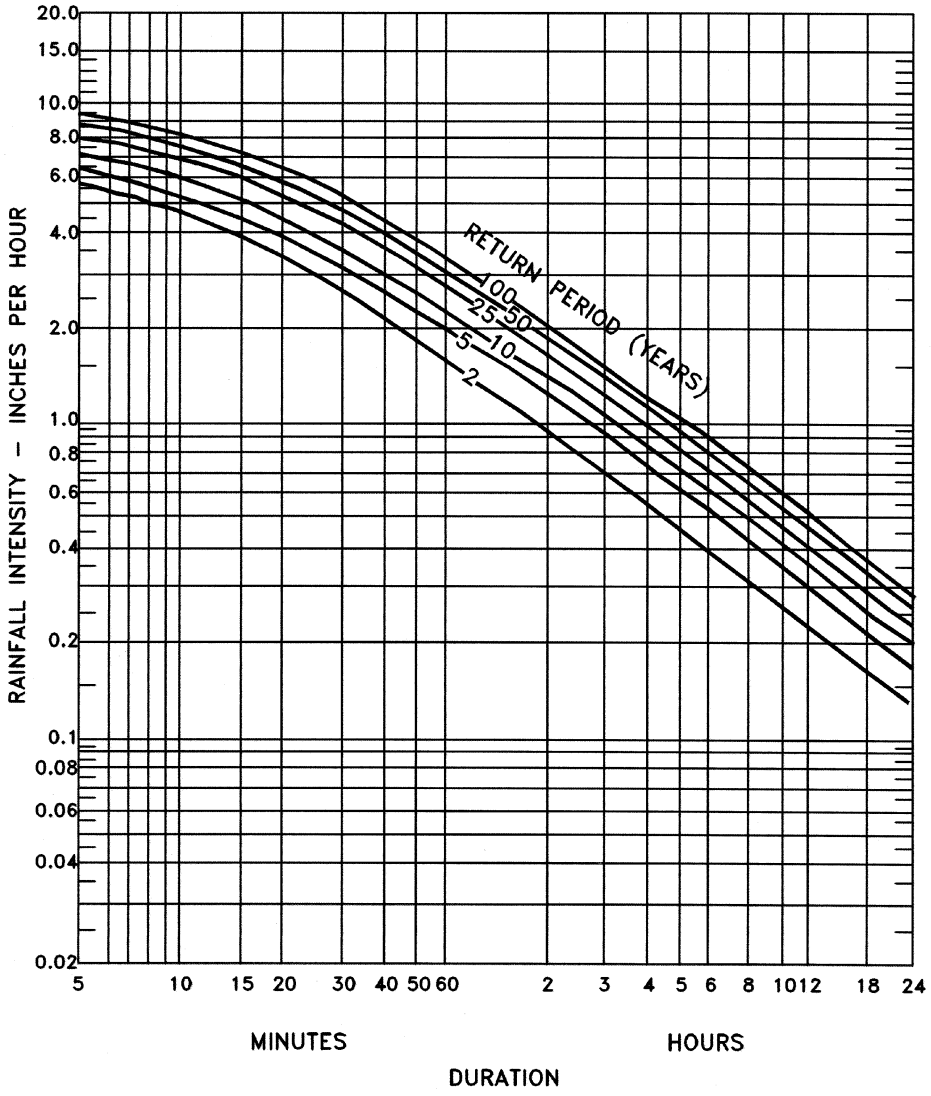

NOTE: Information compiled for the City of Norfolk and adapted for use in the City of Newport News, Virginia. The rendering depicted above is not to scale, therefore it is included for illustrative purposes only. The original scaled chart is found in the latest edition of the VDOT *Drainage Manual.*

Figure 1-2-F

OVERLAND FLOW TIME

NO SCALE

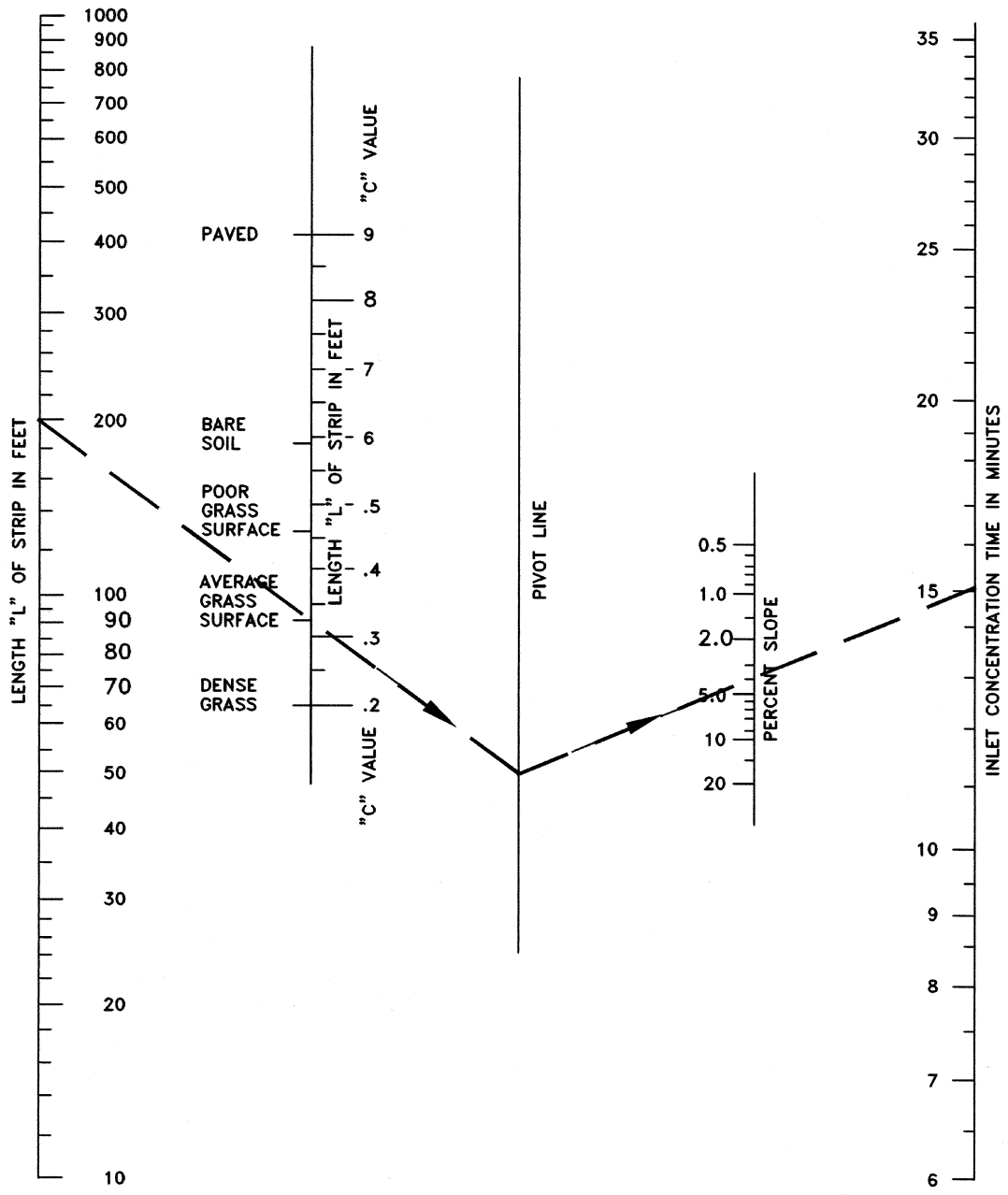

NOTE: Information compiled for the City of Norfolk and adapted for use in the City of Newport News, Virginia. The rendering depicted above is not to scale, therefore it is included for illustrative purposes only. The original scaled chart is found in the latest edition of the VDOT *Drainage Manual*.

Figure 1–2–G

TIME OF CONCENTRATION OF SMALL DRAINAGE BASINS

NO SCALE

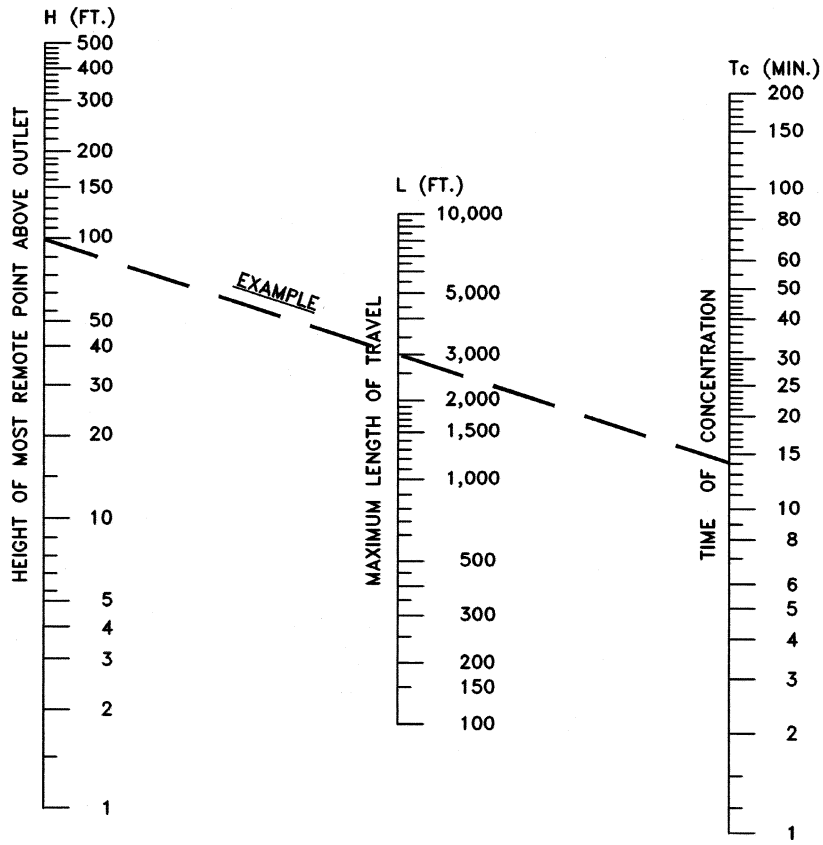

EXAMPLE

HEIGHT = 100 FEET
LENGTH = 3000 FEET
TIME OF CONCENTRATION = 14 MINUTES

BASED ON STUDY BY P.Z. KIRPICH,
CIVIL ENGINEERING
VOL. 10, No. 6
JUNE 1940, P. 362

NOTES:

1. For natural basins with well–defined channels, overland flow on bare earth and mowed grass roadside channels, use Nomograph Tc.
2. For overland flow on grassed surfaces, multiply Tc by 2.
3. For overland flow on concrete or asphalt surfaces, multiply Tc by 0.4.
4. For concrete channels, multiply Tc by 0.2.
5. Information compiled for the City of Norfolk and adapted for use in the City of Newpot News, Virginia. The rendering depicted above is not to scale, therefore it is included for illustrative purposes only. The original scaled chart is found in the latest edition of the VDOT *Drainage Manual*.

Figure 1-2-H

Design Checklist

STORMWATER MANAGEMENT FACILITIES

1. Control scale:
   - Horizontal 1" = 40'; or: _____
   - Vertical 1" = 4'; or: _____
   - Large scale for details.
   - Drawing number and date.
   - North arrow.
   - Signature blocks.
2. Boundary lines (cities, property lines, drainage areas, etc.).
3. Subdivision (name and location).
4. Names and widths of streets.
5. Widths of easements and rights-of-way.
6. Sewer data:
   - Curve data where curved sewers are placed.
   - Line, grade, depth, pipe size, class, length, cover, and hydraulic grade line.
7. Existing lines (sanitary and storm sewers):
   - Size, length, cover, and type.
   - Connections, elevations, and grades.
8. Manholes (designation, spacing, and top and invert elevations).
9. Location and depth of existing utilities, cables and structures:
   - Telephone and electric.
   - Water lines and crossings.
   - Gas lines and crossings.
10. Test hole data (if required).
11. Structural details.
12. Removal and replacements (trees, poles, paving, etc.).
13. Erosion and sediment controls.
14. Reservoir Protection District.
15. Chesapeake Bay Preservation Area.
16. Hardwood stands, swamps, or wetlands.
17. Flood plain:
    - 100-year flood elevations shown.
    - Encroachment analysis.
18. Topography (existing and proposed elevations at two-foot intervals).
19. BMPs and supporting design documents.
20. Design computations:
    - Storm sewer pipes.
    - Storm sewer inlets.
    - Hydraulic grade line.
    - Stormwater management.
21. Existing and proposed corner lot elevations.
22. Street grades.
23. Other: _____
24. Other: _____

1.27 DESIGN STANDARD PLATES

Design standard plates for this chapter are:

Number	Title
4101	Earth Swale
4102	Concrete Swale
4103	Yard Drain
4104	Curb Drop Inlet
4105	Double Curb Drop Inlet
4106	Curb Drop Inlet Casting and Cover
4107	Sidewalk Drain Trough

(Sections 1.28 through 1.39 are reserved. Section 1.40 is next.)

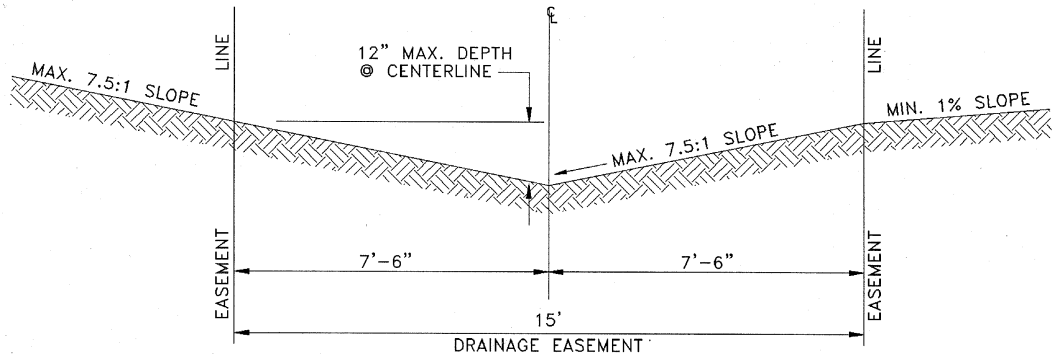

NOTE: Minimum one percent horizontal grade on swale.

Approved August 1997

MOSTAFA A. SABBAH, Ph.D., P.E.
Director, Department of Engineering

EARTH SWALE

Plate 4101

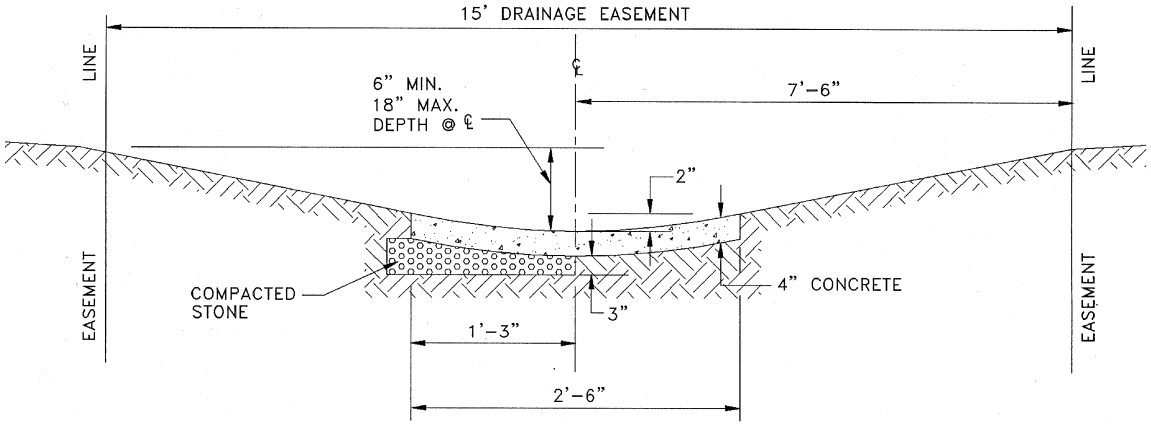

NOTES:

1. Minimum 0.3 percent horizontal grade on swale.
2. Concrete to be installed on undisturbed soil or on compacted #25 or #26 stone (3" minimum).
3. All concrete to be air-entrained, 3500 psi (minimum).

Approved August 1997

MOSTAFA A. SABBAH, Ph.D., P.E.
Director, Department of Engineering

CONCRETE SWALE

Plate 4102

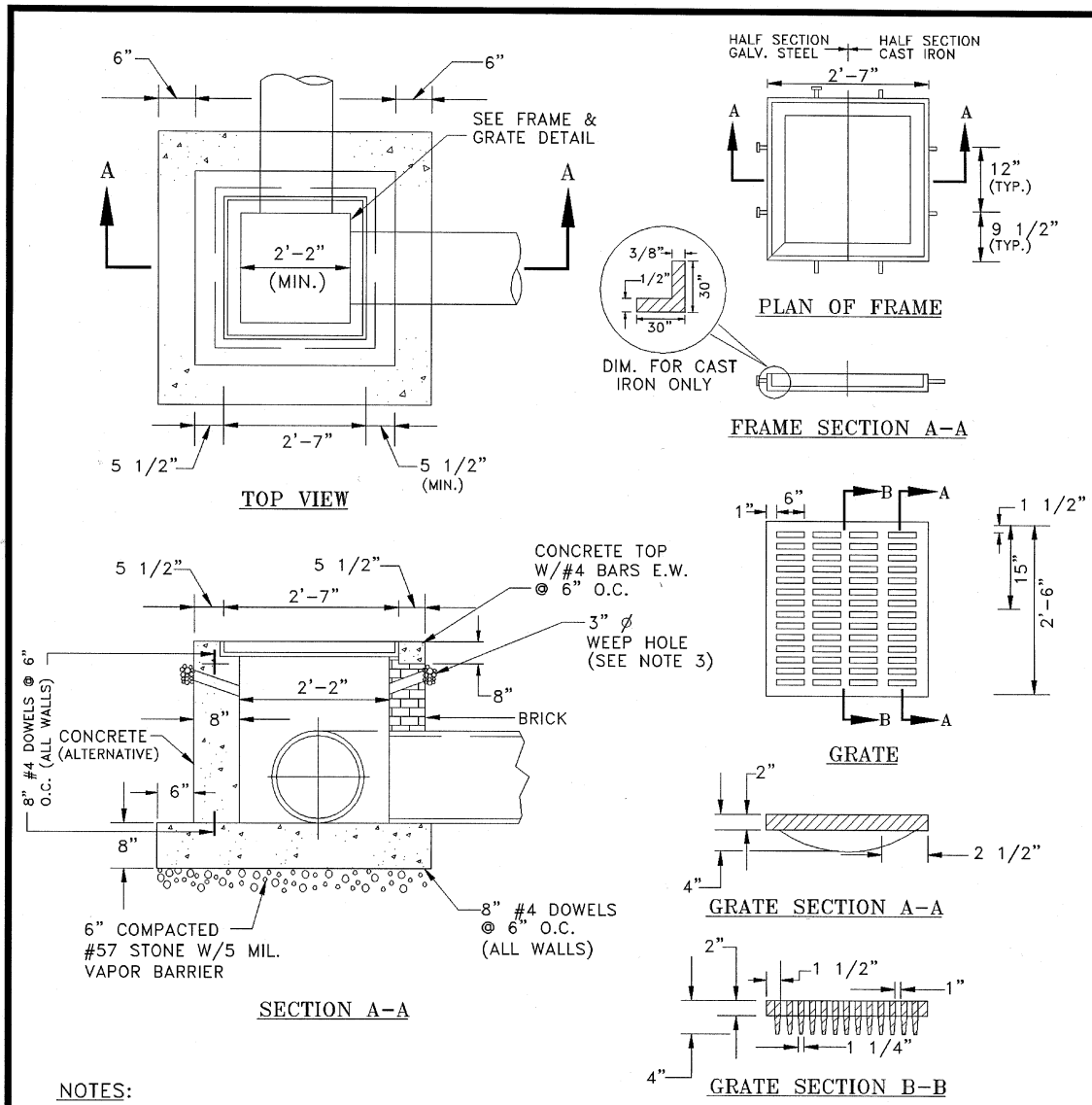

NOTES:

1. 8" concrete walls with #4 bars E.W. @ 6" O.C. or 8" brick wall (sound, common brick laid with 1:3 cement mortar; shoved joints not to exceed 3/8") and plaster interior face with 1/2" 1:2 cement mortar.
2. 3" diameter weep hole with 12" x 12" plastic hardware cloth, 1/4" mesh or galvanized steel wire, minimum wire diameter 0.03", #4 mesh hardware cloth
3. Steps that are accessible shall be required for depths of four feet or greater.
4. All concrete to be air-entrained, 3500 psi (minimum).

Approved August 1997

MOSTAFA A. SABBAH, Ph.D., P.E.
Director, Department of Engineering

YARD DRAIN

Plate 4103

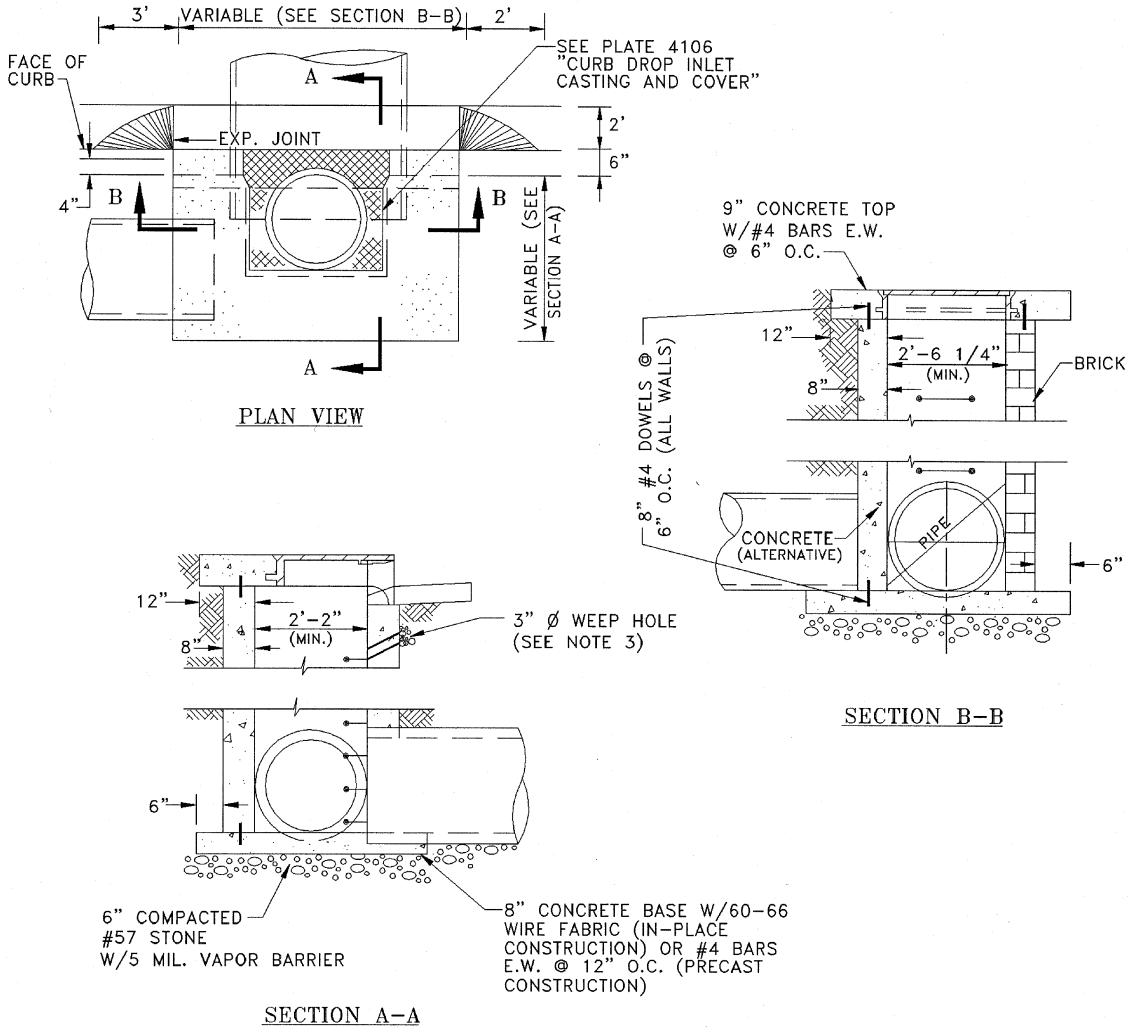

NOTES:

1. 8" concrete walls with #4 bars E.W. @ 6" O.C. or 8" brick wall (sound, common brick laid with 1:3 cement mortar; shoved joints not exceed 3/8") and plaster interior face with 1/2" 1:2 cement mortar.
2. 3" diameter weep hole with 12" x 12" plastic hardware cloth, 1/4" mesh or galvanized steel wire, minimum wire diameter 0.03", #4 mesh hardware cloth anchored firmly to outside of structure. 4" D x 6" W of aggregate #68, #78 or #8.
3. Steps that are accessible shall be required for depths of four feet or greater.
4. All concrete to be air-entrained, 3500 psi (minimum).

Approved August 1997

MOSTAFA A. SABBAH, Ph.D., P.E.
Director, Department of Engineering

CURB DROP INLET

Plate 4104

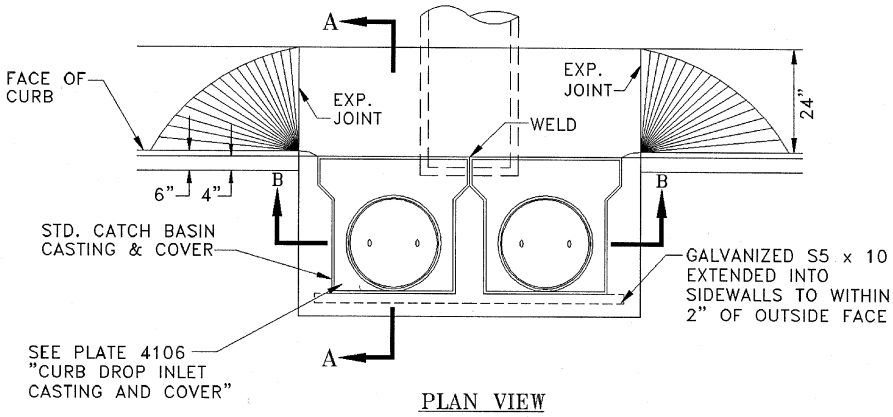

PLAN VIEW

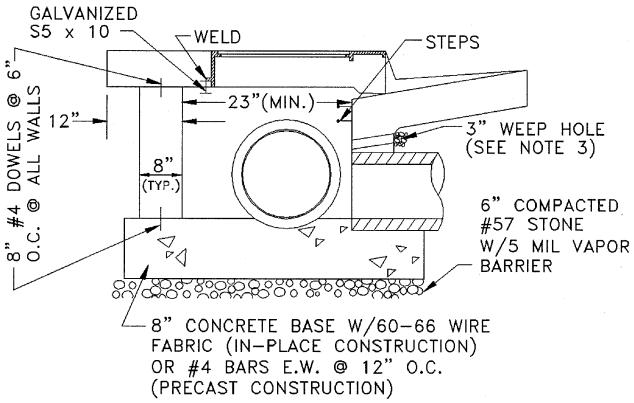

SECTION A–A

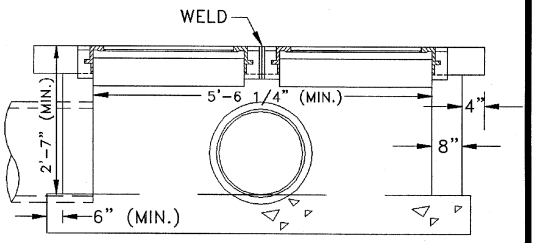

SECTION B–B

NOTES:

1. For repair/replacement purposes only.
2. 8" concrete walls with #4 bars E.W. @ 6" O.C. or 8" brick wall (sound, common brick laid with 1:3 cement mortar; shoved joints not to exceed 3/8") and plaster interior face with 1/2" 1:2 cement mortar.
3. 3" diameter weep hole with 12" x 12" plastic hardware cloth, 1/4" mesh or galvanized steel wire, minimum wire diameter 0.03", #4 mesh hardware cloth anchored firmly to outside of structure. 4" D x 6" W of aggregate #68, #78 or #8.
4. Steps that are accessible shall be required for depths of four feet or greater.
5. All concrete to be air-entrained, 3500 psi (minimum).

Approved August 1997

MOSTAFA A. SABBAH, Ph.D., P.E.
Director, Department of Engineering

DOUBLE CURB DROP INLET

Plate 4105

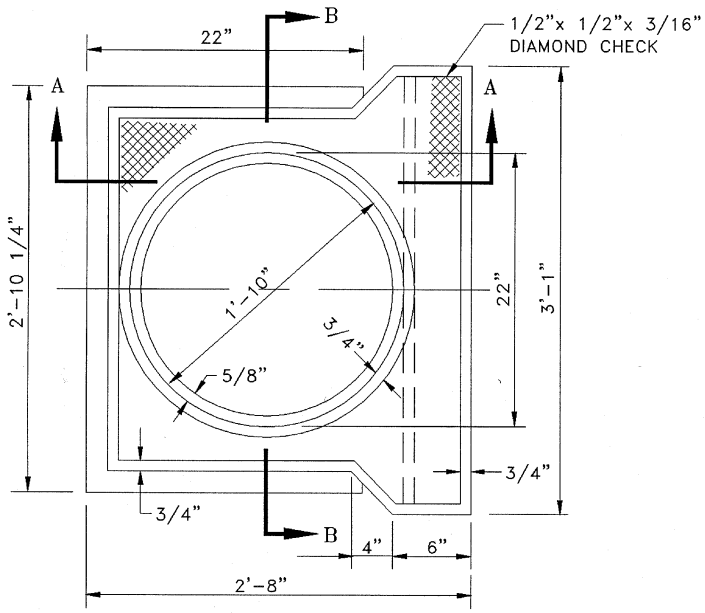

FRAME PLAN

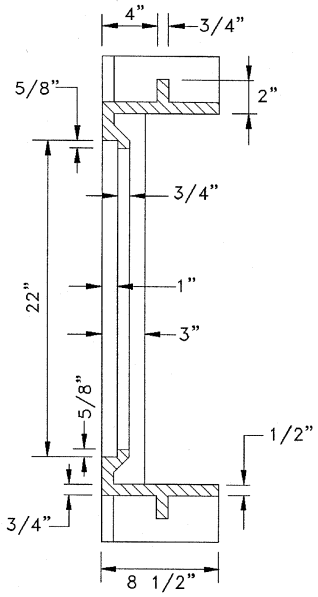

SECTION B–B
FRAME PLAN

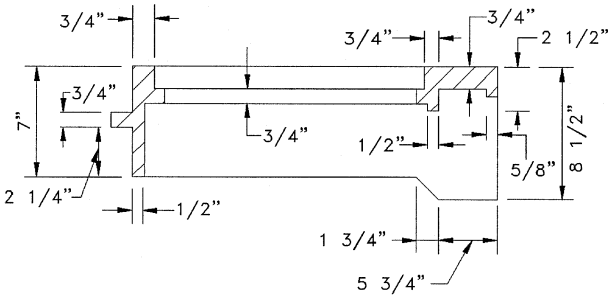

SECTION A–A
FRAME PLAN

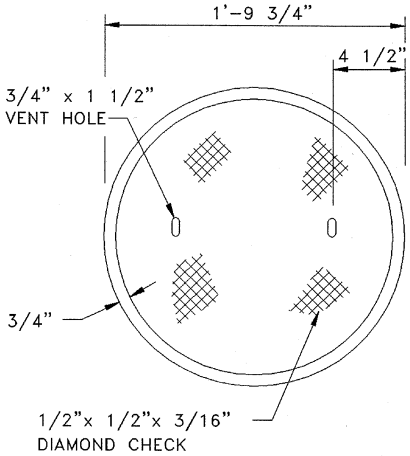

COVER PLAN

NOTE: Approximate weight of frame and cover is 350 pounds.

Approved August 1997

MOSTAFA A. SABBAH, Ph.D., P.E.
Director, Department of Engineering

CURB DROP
INLET CASTING
AND COVER

Plate 4106

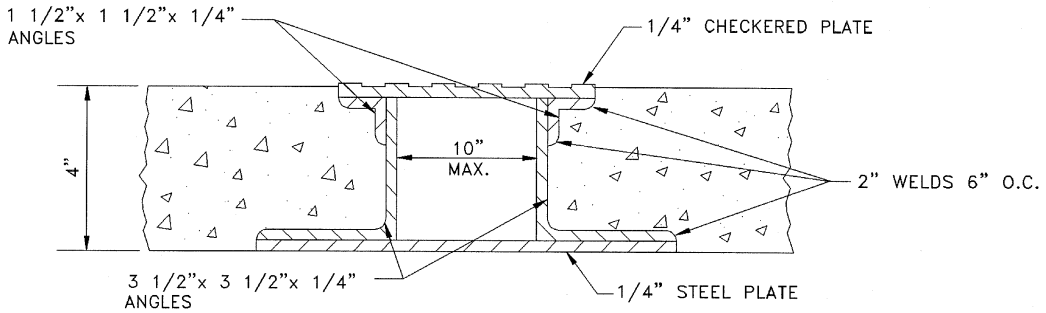

SECTION B–B

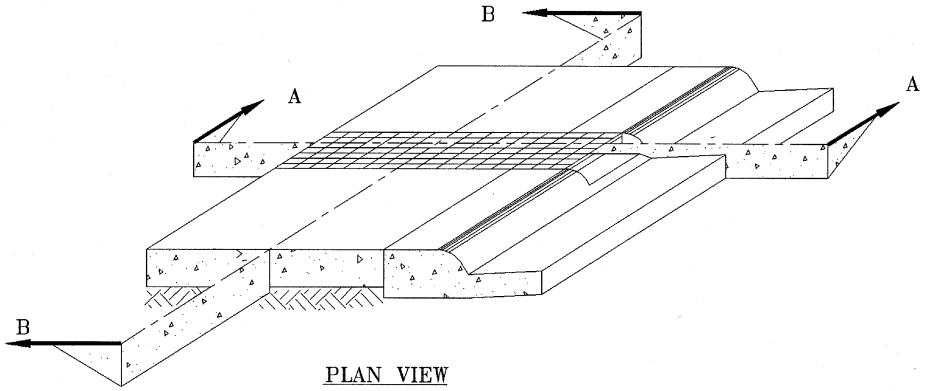

PLAN VIEW

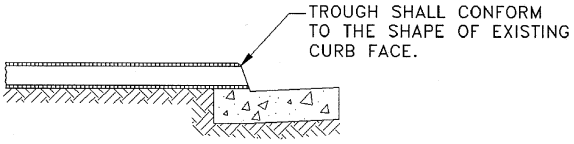

SECTION A–A

NOTE: For repair/replacement purposes only.

Approved August 1997

MOSTAFA A. SABBAH, Ph.D., P.E.
Director, Department of Engineering

SIDEWALK
DRAIN TROUGH

Plate 4107

STORMWATER MANAGEMENT

Part Three
WATER QUALITY CONTROL

1.40 CONSOLIDATED BMP REQUIREMENTS

The Best Management Practice (BMP) criteria contained in the State Stormwater Management Regulations are the cornerstone of the City of Newport News consolidated BMP requirements. The stormwater pollution control requirements in the State regulations can serve as the basis for compliance with State Chesapeake Bay criteria as well as National Pollutant Discharge Elimination System (NPDES) regulations. Although the applicable regulations include provisions which permit the City to rely solely on the BMP criteria in the State regulations, this approach will not always satisfy the BMP performance criteria in the other regulations. This is because the BMP criteria in the State regulations are "technology-based," meaning that these regulations specify that any one of three different BMPs is presumed to comply with the stormwater pollution control requirements set forth in the regulations. However, other regulations (for example, the Chesapeake Bay regulations) specify that post-development stormwater pollution loading must be reduced to a "nondegradation" loading target (for

example, pre-development loading based on "average land cover" conditions). Some of the BMP technologies specified in the State regulations do not exhibit sufficient stormwater treatment to achieve a nondegradation loading target. Likewise, the City guidelines for compliance with its Reservoir Protection Ordinance specify the preferred use of only one of the BMPs (wet detention) permitted by the State regulations. Reliance on the other two BMPs permitted by the State regulations may not provide sufficient water quality protection for the City water supply reservoirs.

1.41 BMPs FOR NEW DEVELOPMENT OR REDEVELOPMENT

1.41.1 Suitable BMPs. Table 1-3-1 lists BMPs that are suitable for compliance with stormwater pollution control regulations in the City of Newport News. The table summarizes BMP design criteria along with providing average and maximum removal efficiencies for total P, which is the keystone pollutant for Chesapeake Bay regulations and the most critical pollutant for the protection of water supply reservoirs under the City Reservoir Protection Ordinance.

1.41.2 Wet and Dry Detention. Extended dry detention and modified extended dry detention are two BMPs which may be suitable for areas where wet detention is not feasible (for example, due to wetlands constraints). Although wet detention BMPs are preferable for water supply watersheds, BMPs which rely upon the principles of extended dry detention can be used to comply with NPDES permit regulations, State Stormwater Management Regulations, and Chesapeake Bay regulations (depending on the land use).

1.41.3 Infiltration. A dry well is one infiltration BMP which may be suitable for development sites where infiltration BMPs are feasible. Porous pavement is no longer recommended for use in the City because of its heavy maintenance requirements and documented failure rates.

1.41.4 Swales. For small sites (less than five acres) with relatively low imperviousness (for example, single-family residential land use), the two swale BMPs listed in Table 1-3-1 (swale with check dams and biofiltration swale) can be used as stand-alone BMPs to comply with some of the stormwater

pollution control regulations. However, due to their fairly low efficiencies and limited suitability for highly impervious land uses, swale BMPs are probably best suited to supplementing the primary BMPs described in the table.

1.41.5 Biofiltration. A biofiltration swale is a supplemental BMP that reduces stormwater pollution discharges by maximizing residence times in grass drainage ditches.

1.41.6 Natural Open Space. Primary BMPs may also be supplemented by preserving natural open space within the development site. As indicated in Table 1-3-1, the preservation of natural open space reduces post-development pollutant loadings by approximately one percent for every one percent of the site which is maintained in an undisturbed state. In other words, if 10 percent of an office development site is maintained as natural open space, a BMP credit equivalent to a 10 percent reduction in total P loadings may be assumed. Unlike the other BMPs in Table 1-3-1 that actually treat post-development stormwater pollutant loadings, natural open space preservation is actually a "source control" BMP which reduces the source of post-development loadings. An important requirement for this open space BMP credit is that the designated section of the development site must be perpetually undisturbed open space. This BMP credit should be restricted to perpetually undisturbed Homeowners Association (or "common") areas, flood plain easement areas, and conservation easement areas. Open space areas within private lots or within maintained landscaped areas or active recreational areas are not eligible for this credit.

1.42 BMP EFFICIENCY REQUIREMENTS

This section summarizes BMP efficiency requirements for stormwater pollution control regulations associated with new development and redevelopment in the City. Table 1-3-2 identifies relevant BMP efficiency requirements for each stormwater pollution control regulation which covers new development and redevelopment in the City. The table also shows uncontrolled annual loadings of total P for different land use categories based upon monitoring data from the City NPDES permit program.

Table 1-3-1

TOTAL P REMOVAL EFFICIENCIES FOR BMPs SUITABLE FOR DEVELOPMENT AND REDEVELOPMENT IN THE CITY OF NEWPORT NEWS

BMP (listed in order of preference)	AVERAGE TOTAL P REMOVAL		MAXIMUM TOTAL P REMOVAL	
	EFFICIENCY	DESIGN CRITERIA	EFFICIENCY	DESIGN CRITERIA
1. Wet Detention	50%	• Permanent pool storage = (4.0)*(WQ VOL)	65%	• Same as "average"
2. Extended Dry Detention	30%	• Temporary storage of WQ VOL • 30-hour detention period	40%	• Temporary storage of (2.0)*(WQ VOL) • 30-hour detention period
3. Modified Extended Dry Detention	50%	• Temporary storage of WQ VOL • 30-hour detention period • Shallow marsh in lower stage of basin	60%	• Temporary storage of (2.0)*(WQ VOL) • 30-hour detention period • Shallow marsh in lower stage of basin
4. Infiltration (Trench, Dry Well)	50%	• Infiltration storage for WQ VOL	65%	• Infiltration storage for (2.0)*(WQ VOL)
5. Grassed Swale with Check Dams	10-20%	• Storage of WQ VOL upstream of check dams	30%	• Same as "average"
6. Biofiltration Swale	10-20%	• Minimum residence time of nine minutes	30%	• Same as "average"
7. Natural Open Space Preservation	1% per 1% of site area	• Undisturbed open space	1% per 1% of site area	• Same as "average

NOTE: WQ VOL is the "water quality volume" specified in the State Stormwater Management Regulations. It is equivalent to 0.5 inch of runoff per impervious acre within the project area.

Table 1-3-2

BMP EFFICIENCY REQUIREMENTS

LAND USE	UNCONTROLLED TOTAL P LOADINGS (LBS/ACRE/YR)	RESERVOIR PROTECTION ORDINANCE*	STATE STORMWATER MANAGEMENT REGULATIONS			CBLAD REGS**
			WET DETENTION	EXTENDED DRY DETENTION	INFILTRATION	
SF Residential (< 2 DU/acre) (20% impervious)	0.7	65%	50-55%	30%	50%	---
SF Residential (2-4 DU/acre) (30% impervious)	0.9	65%	50-55%	30%	50%	---
SF Residential (4-7 DU/acre) (40% impervious)	1.1	65%	50-55%	30%	50%	18%
MF Residential (55% impervious)	1.2	65%	50-60%	30%	50%	25%
Office (60% impervious)	1.5	65%	50-60%	30%	50%	40%
Light Industrial (65% impervious)	1.6	65%	50-60%	30%	50%	44%
Heavy Industrial (85% impervious)	2.0	65%	50-60%	30%	50%	55%
Commercial (85% impervious)	2.0	65%	50-60%	30%	50%	55%

* Based on designation of wet detention as preferred BMP in water supply watersheds.
** Based on "average land cover" conditions (36% imperviousness citywide) that result in baseline total P loading rate of 0.9 lbs/acre/year.

1.42.1 <u>Stormwater Pollution Loading Factors</u>:

a. The basis for most BMP efficiency requirements is the annual stormwater pollution loading factor for the proposed urban land use.

b. The total P loading estimates developed for the City NPDES stormwater discharge permit are in Table 1-3-3. These watershed loading calculations are equivalent to baseline loads for Aaverage land cover@ conditions specified in the CBLAD guidelines for Chesapeake Bay regulations. The citywide Aaverage land cover@ condition is an average impervious cover ($I_{watershed}$) of 36 percent. The total P loading rate for Aaverage land cover@ conditions in the City is 0.9 lbs/acre/year. This baseline loading rate is used to establish BMP efficiency requirements for Chesapeake Bay management areas.

1.42.2 <u>City Reservoir Protection Ordinance</u>. The BMP efficiency requirements for the City Reservoir Protection Ordinance are based on the designation of wet detention as the Apreferred BMP@ for water supply watersheds. The City master plan for water supply watersheds recommends wet detention BMPs be required for future development to protect water quality in those reservoirs. Based on design criteria for wet detention basins, the preferred BMP should achieve an average total P removal efficiency of 50 percent, with maximum reported efficiencies as high as 65 percent.

1.42.3 <u>State Stormwater Management Regulations</u>:

a. State regulations specify three BMPs for new development see Table 1-3-2). These BMPs achieve different total P removal efficiencies based on design criteria specified in the regulations.

b. Under State regulations, wet detention BMPs must have a permanent pool storage equivalent to three times the Awater quality volume@ (0.5 inch per impervious acre). This permanent pool requirement is slightly smaller than the City wet detention BMP criteria for water supply watersheds, which accounts for the lower maximum total P removal efficiencies shown in Table 1-3-2 for the State regulations (such as, 50-60 percent for the State regulations compared to 65 percent for the City Reservoir Protection Ordinance). The City design criteria for wet detention BMPs in water supply watershed is equivalent to a permanent pool storage of approximately four to five times the Awater quality volume.@

Table 1-3-3

AVERAGE WATERSHED LOADINGS OF TOTAL P: "AVERAGE LAND COVER" CONDITIONS IN THE CITY OF NEWPORT NEWS

MAJOR WATERSHED	DRAINAGE AREA (ACRES)	IMPERVIOUS COVER (%)	TOTAL P LOADINGS	
			LBS/YR	LBS/ACRE/YR
Warwick River	14,111	34	10,781	0.8
Deep Creek	3,617	36	3,002	0.8
Lake Maury	2,922	39	2,331	0.8
Other James River Drainage	8,250	35	7,586	0.9
Back River	4,029	36	3,254	0.8
Hampton Roads Drainage	2,693	54	3,602	1.3
CITYWIDE TOTALS (Average Land Cover)	35,622	36	30,556	0.9

SOURCE: City of Newport News, Part 2 NPDES Stormwater Permit Application, May 1992.

c. The State regulations specify that extended detention BMPs must be sized to detain and release the "water quality volume" over a 30-hour period. The detention time is assumed to be equivalent to the drawdown time from brim-full conditions of the water quality volume in the detention basin. Extended detention BMPs achieve removal of suspended pollutants through sedimentation under fairly quiescent conditions following each storm event. The 30 percent efficiency for total P reported in Table 1-3-2 assumes that a storage capacity equivalent to the "water quality volume" will achieve the capture and complete sedimentation of approximately 90 percent of the annual suspended loadings of total P in urban runoff. The total P removal efficiency can be increased to 40 percent (as indicated in Table 1-3-1) by increasing the extended detention storage capacity to two times the "water quality volume."

d. Under the State regulations, infiltration BMPs must be sized to capture and release the "water quality volume" within 48 hours. As shown in Table 1-3-2, the total P removal efficiency of infiltration BMPs is similar to the efficiency reported for wet detention BMPs. Infiltration BMPs sized to capture 0.5 inch of runoff per impervious acre should achieve an average total P removal efficiency of 50 percent. The total P removal efficiency can be increased to 65 percent (as indicated in Table 1-3-1) by increasing the infiltration storage capacity to two times the criteria. Because of soils restrictions and maintenance requirements to eliminate clogging conditions, the use of infiltration BMPs shall be restricted to small nonresidential development projects where other BMPs are not cost-effective.

1.42.4 CBLAD Regulations. To identify technology-based BMPs that satisfy the CBLAD regulations, the BMP efficiency requirements for total P in Table 1-3-2 can be compared with the BMP capabilities listed in Table 1-3-1. Since the total P loading rate for most single-family residential development (up to 36 percent imperviousness) is less than the baseline conditions, no BMPs are required to satisfy the CBLAD regulations. For higher density single-family residential development (greater than 36 percent imperviousness), the CBLAD BMP efficiency requirements (up to 18 percent) can be satisfied by grassed swale BMPs (10-20 percent efficiency) and extended dry detention BMPs (30 percent efficiency). For multi-family residential development (up to 55 percent imperviousness), the CBLAD efficiency requirements (up to 25 percent) can be satisfied by swale BMPs (development projects less than five acres) and extended dry

detention BMPs. For non-residential land use categories with imperviousness of 60 percent or greater (office, commercial, or industrial), the CBLAD efficiency requirements (40-55 percent) can be satisfied by wet detention BMPs, modified extended dry detention BMPs, and infiltration BMPs (development projects less than five acres).

1.42.5 Consolidated BMP Performance Criteria:

a. Consolidated performance criteria curves in Figure 1-3-A assume that BMP efficiency requirements which satisfy CBLAD performance standards will also satisfy the BMP requirements in the State Stormwater Management Regulations. This approach for developing consolidated BMP performance criteria curves that are tailored to the City of Newport News parallels criteria being developed by State agencies. The consolidated BMP criteria for the CBLAD regulations and the State Stormwater Management Regulations are based upon the CBLAD BMP efficiency requirements shown in Table 1-3-2. Figure 1-3-A also shows the BMP performance criteria curve for the City Reservoir Protection Ordinance that assumes a minimum required efficiency of 50 percent for total P (such as, wet detention BMP is the "preferred BMP" in water supply watersheds).

b. Figure 1-3-A can serve as the basis for "technology-based" BMP criteria for new development and redevelopment in the City of Newport News.

1.43 TECHNOLOGY-BASED BMP CRITERIA

Table 1-3-4 presents a BMP Technology Criteria Matrix based on Figure 1-3-A and tailored to the BMP efficiency requirements in the City of Newport News. For each impervious cover category, this matrix lists the minimum BMP alternatives which will satisfy the BMP efficiency requirements of applicable regulations. Since certain BMPs are restricted to either small or large drainage areas, Table 1-3-4 presents the minimum BMP requirements for drainage areas less than five acres and for five acres or greater. The small and large area categories in Table 1-3-4 are based upon the total area of the development project, not the potential drainage area of the specified BMPs. The BMP requirements for each impervious cover category in Table 1-3-4 are further summarized in the BMP checklist in Table 1-3-5 and are discussed in this section.

Figure 1–3–A

BMP PERFORMANCE CRITERIA CURVES

FOR USE IN THE CITY OF NEWPORT NEWS

NO SCALE

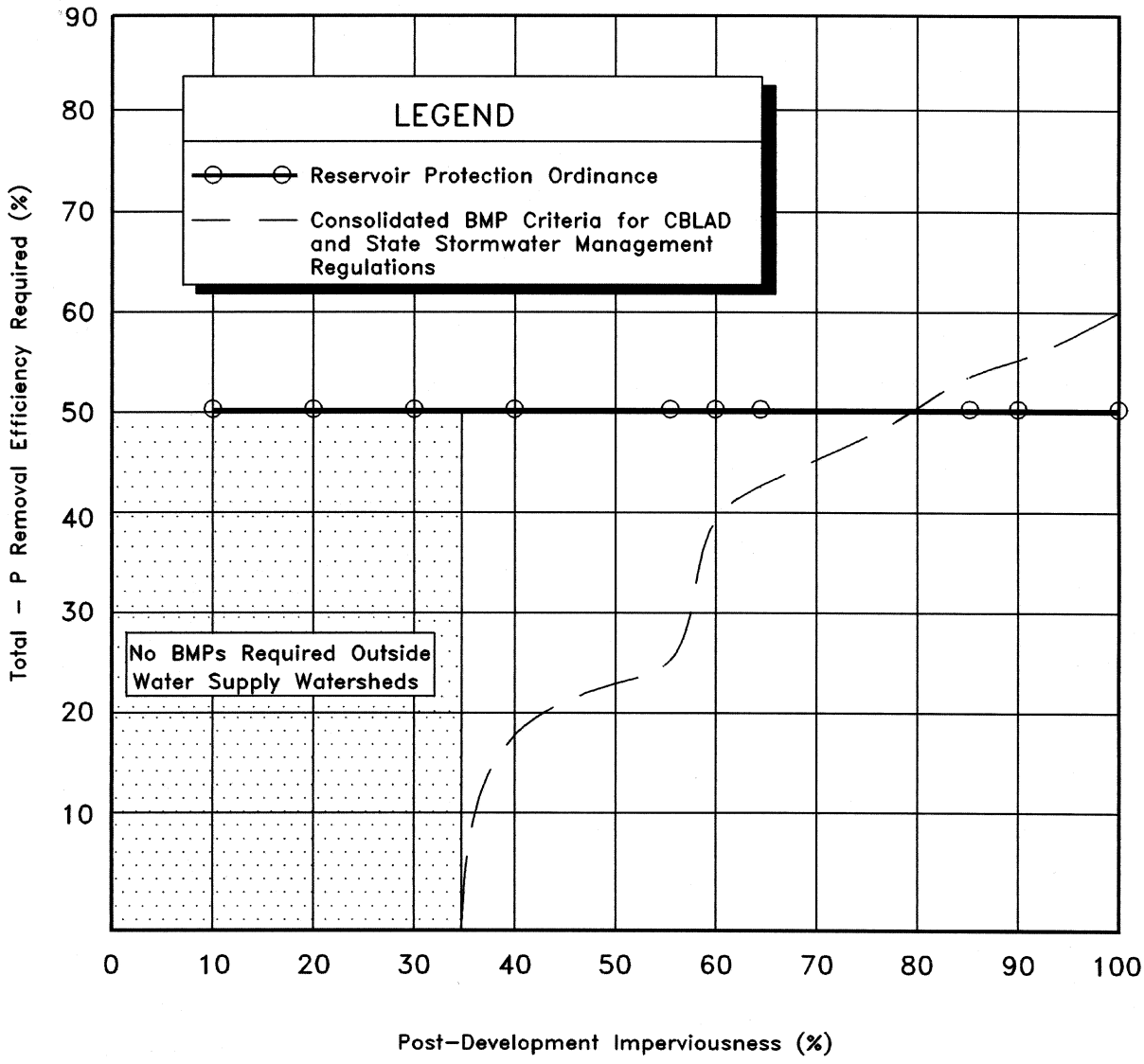

Table 1-3-4

BMP TECHNOLOGY CRITERIA MATRIX FOR NEW DEVELOPMENT

IMPERVIOUS COVER (%) OF DEVELOPMENT PROJECT	AREA OF DEVELOPMENT PROJECT	
	LESS THAN 5 ACRES	5 ACRES OR GREATER
0-10%	No BMPs Required	No BMPs Required
11-36%	TYPE I BMP (Water Supply Watersheds Only) • Biofiltration Swale • Grassed Swale with Check Dams NOTE: BMPs are only required for water supply watersheds.	TYPE V BMP (Water Supply Watersheds Only) • Wet Detention[1] (≥ 10 acre drainage area) • Extended Dry Detention NOTE: BMPs are only required for water supply watersheds.
37-55%	TYPE II BMP • Biofiltration Swale • Grassed Swale with Check Dams • Extended Dry Detention	TYPE VI BMP • Extended Dry Detention • Wet Detention[1] (≥ 10 acre drainage area)
56-80%	TYPE III BMP • Extended Dry Detention (Oversized)[2] • Modified Extended Dry Detention • Infiltration	TYPE VII BMP • Extended Dry Detention (Oversized)[2] • Modified Extended Dry Detention • Wet Detention[1] (≥ 10 acre drainage area)
81-100%	TYPE IV BMP • Modified Extended Dry Detention • Infiltration	TYPE VIII BMP • Modified Extended Dry Detention • Wet Detention[1] (≥ 10 acre drainage area)

[1] Wet Detention is the preferred BMP for urban development in a water supply watershed.

[2] This BMP is suitable for development with 56-65 percent imperviousness located outside water supply watersheds. Extended detention storage zone should be sized for two times the "water quality volume." Grassed swale BMP is required for development with more than 60 percent imperviousness.

Table 1-3-5

ACCEPTABLE BMP TECHNOLOGY CHECKLIST (CITY OF NEWPORT NEWS)

BMP TECHNOLOGY	ACCEPTABLE BMP BASED ON IMPERVIOUS COVER OF DEVELOPMENT PROJECT			
	11-36%	37-55%	56-80%	81-100%
Wet Detention	W[1,2]	W[1,2],C[2],O[2]	W[1,2],C[2],O[2]	W[1,2],C[2],O[2]
Extended Dry Detention	W[3]	W[3],C,O	C[5],O[5]	---
Modified Extended Dry Detention	---	---	W[3],C	W[3],C
Infiltration	---	---	W[4],C[4],O[4]	W[4],C[4],O[4]
Biofiltration Swale	W[3,4]	W[4],C[4],O[4]	---	---
Grassed Swale with Check Dams	W[3,4]	W[4],C[4],O[4]	---	---

KEY

W = Water supply watersheds
C = Chesapeake Bay management areas
O = Other sections of the City

FOOTNOTES

[1] Wet detention is the preferred BMP for water supply watersheds.

[2] Wet detention BMPs must have a drainage area of 10 acres or greater.

[3] This BMP may be used in a water supply watershed if it is not feasible to use wet detention.

[4] This BMP is only acceptable for development projects that are less than five acres in size.

[5] This BMP is acceptable for development with 56-65 percent imperviousness located outside water supply watersheds if the extended detention storage zone is sized for two times the "water quality volume" and if this BMP is combined with a grassed swale BMP (61-65 percent imperviousness).

1.43.1 <u>BMP Criteria: 0-10% Imperviousness</u>. For development with an imperviousness of 10 percent or less, no BMPs are required to achieve adequate stormwater pollution control.

1.43.2 <u>BMP Criteria: 11-36% Imperviousness</u>:

a. For development projects with imperviousness in the range of 11 percent to 36 percent, BMPs are only required for water supply watersheds.

b. For development projects less than five acres (Type I BMP), grassed swale BMPs should suffice for single-family residential development which falls into this imperviousness category.

c. For larger development projects (Type V BMP), wet detention is the preferred BMP for drainage areas of 10 acres or greater (such as, a minimum drainage area of 10 acres is recommended to ensure dry weather flow to help sustain the permanent pool during extreme dry periods). If a wet detention BMP is not feasible, an extended dry detention BMP should be required for development projects of five acres or greater.

1.43.3 <u>BMP Criteria: 37-55% Imperviousness</u>. For development projects with imperviousness in the range of 37 percent to 55 percent, the required minimum BMP efficiencies for total P are 50 percent within water supply watersheds and up to 25 percent within Chesapeake Bay management areas and other sections of the City.

1.43.4 <u>BMP Criteria: 56-80% Imperviousness</u>:

a. For development projects with imperviousness in the range of 56 percent to 80 percent, required minimum BMP efficiencies for total P are 50 percent within water supply watersheds and 25 percent to 50 percent within other sections of the City (including Chesapeake Bay management areas).

b. For development projects of less than five acres (Type III BMP), the minimum BMP efficiencies can be achieved as follows:

(1) In water supply watersheds, appropriate BMP options are modified extended dry detention and infiltration.

(2) For multi-family residential development (56-65 percent imperviousness) outside water supply watersheds, appropriate BMP options are an oversized extended dry detention BMP (i.e., extended dry detention storage zone should be sized for two times the Awater quality volume@), modified extended dry detention, and infiltration.

(3) For development with an imperviousness greater than 65 percent outside water supply watersheds, appropriate BMP options are modified extended dry detention and infiltration.

c. For development projects that are five acres or greater (Type VII BMP), the minimum required BMP efficiencies for total P can be achieved as follows:

(1) In water supply watersheds, wet detention BMPs are required.

(2) For development projects outside water supply watersheds, an oversized extended dry detention basin is acceptable for multi-family residential development up to 65 percent imperviousness, while modified extended dry detention and wet detention are suitable for any development up to 80 percent imperviousness.

d. The combination of an oversized extended dry detention basin and grassed swale BMPs is an appropriate option only for multi-family residential development (61 percent to 65 percent imperviousness) outside water supply watersheds where BMP efficiency requirements for total P are greater than 40 percent. Procedures for determining the required coverage of grassed swales in a combination BMP are presented later in this chapter.

1.43.5 <u>BMP Criteria: 81-100% Imperviousness</u>:

a. For development projects with imperviousness of 81 percent or greater, required minimum BMP efficiencies for total P are 50 percent within water supply watersheds and 50 percent to approximately 60 percent within Chesapeake Bay management areas and other sections of the City.

b. For development projects that are less than five acres (Type IV BMP), the minimum required BMP efficiencies for total P can be achieved with modified extended dry detention and infiltration BMPs.

c. For development projects that are five acres or greater (Type VIII BMP), the minimum required BMP efficiencies for total P can be achieved as follows:

(1) Inside of water supply watersheds, wet detention BMPs are required.

(2) Outside of water supply watersheds, appropriate BMP options are wet detention and modified extended dry detention.

1.44 BMP COVERAGE OF DEVELOPMENT SITE

The BMP efficiency requirements in Table 1-3-2 and the BMP technology criteria in Tables 1-3-4 and 1-3-5 presume that the designated BMPs will drain 100 percent of the development site. Since it will not always be feasible to site BMPs to drain the entire development project, this section outlines supplemental BMP requirements to ensure sufficient BMP coverage of the development site. In the discussion which follows, the BMPs designated in the technology criteria matrix (Table 1-3-4) are referred to as "primary" BMPs.

1.44.1 Minimum Requirements. For each development project, a minimum of 80 percent of the developed area must be drained by an appropriate primary BMP. The shortfall in the primary BMP coverage (such as, up to 20 percent of the development site) must be offset by the use of grassed swale BMPs and/or natural open space. For regulatory compliance purposes, grassed swale BMPs are assumed to exhibit a total P removal efficiency of 30 percent and natural open space preservation is assumed to exhibit an efficiency of one percent for every one percent of site area dedicated as undisturbed open space. The use of natural open space as a supplemental BMP should be restricted to undisturbed common space, flood plain easement areas, and conservation easement areas.

1.44.2 Supplemental Requirements. Data in Tables 1-3-6 through 1-3-10 summarize supplemental BMP requirements for wet detention BMPs, extended dry detention BMPs, modified extended dry detention BMPs, and infiltration BMPs, respectively. The supplemental BMP requirements are presented for six land use categories that cover an imperviousness range from 20 percent to 90 percent and for three primary BMP coverage percentages (80,

90 and 100). For the specified land use category and primary BMP coverage percentage, the tables indicate the minimum percentage of the developed area that must be served by grassed swale BMPs or the minimum percentage of the development site that must be covered by natural open space. The following examples illustrate how the designer can use the data in Tables 1-3-6 through 1-3-10 to determine supplemental BMP requirements for a 30-acre site that is proposed for multi-family residential development (50 percent impervious) in a water supply watershed:

- The site for a wet detention BMP, selected from the technology criteria matrix (Table 1-3-4), only drains 90 percent of the 30-acre project, but the entire 30 acres are programmed for development. Based on data in Table 1-3-6, 90 percent coverage by the primary BMP requires either: (a) the use of supplemental grassed swale BMPs to drain at least 15 percent to 20 percent (4.5 to 6 acres) of the developed site; or (b) the dedication of at least five percent (2.5 acres) of the project site to natural open space.

- Combinations of swale BMP coverage and natural open space dedication are also feasible, with the percentage reduction in the coverage of one supplemental BMP offset by the same percentage increase in the coverage of the other. An appropriate combination of supplemental BMPs for the 30-acre development site would be coverage of 7.5 percent to 10 percent of the developed area by grassed swale BMPs plus the dedication of 2.5 percent of the project site to natural open space (such as, 50 percent of the values shown in Table 1-3-6).

1.44.3 Interpretation of Table Values. In using Tables 1-3-6 through 1-3-10, it is acceptable to straight-line interpolate between table entries based on the actual percent coverage for the primary BMP. For example, for a single-family residential development site (40 percent imperviousness) with an extended dry detention BMP (primary BMP) serving 86 percent of the developed area, the supplemental BMP requirements determined by interpolation between reported values in Table 1-3-8 are 14 percent coverage by grassed swale BMPs or dedication of approximately four percent of the project area to natural open space.

Table 1-3-6

SUPPLEMENTAL BMP REQUIREMENTS FOR WET DETENTION BMPs (DEVELOPMENT WITHIN WATER SUPPLY WATERSHEDS)

LAND USE	WET DETENTION BMP COVERAGE (% OF PROJECT AREA)	SUPPLEMENTAL BMP REQUIREMENT (% OF PROJECT AREA)	
		SWALE BMPs	NATURAL OPEN SPACE
Single-Family Residential (20-40 percent imperviousness)	100 90 80	--- 15-20 30-35	--- 5 10
Multi-Family Residential (40-60 percent imperviousness)	100 90 80	--- 15-20 30-35	--- 5 10
Office (50-60 percent imperviousness)	100 90 80	--- 15-20 30-35	--- 5 10
Light Industrial (60-70 percent imperviousness)	100 90 80	--- 15-20 30-35	--- 5 10
Heavy Industrial (80-90 percent imperviousness)	100 90 80	--- 15-20 * 30-35	--- 5 10
Commercial (80-90 percent imperviousness)	100 90 80	--- 15-20 * 30-35	--- 5 10

* Indicates that such extensive use of swale BMPs is probably not practicable for this land use.

Table 1-3-7

SUPPLEMENTAL BMP REQUIREMENTS FOR WET DETENTION BMPs (DEVELOPMENT OUTSIDE WATER SUPPLY WATERSHEDS)

LAND USE	EXTENDED DRY DETENTION BMP COVERAGE (% OF PROJECT AREA)	SUPPLEMENTAL BMP REQUIREMENT (% OF PROJECT AREA)	
		SWALE BMPs	NATURAL OPEN SPACE
Single-Family Residential (0-36 percent imperviousness)	100 90 80	No BMPs No BMPs No BMPs	No BMPs No BMPs No BMPs
Single-Family Residential (37-40 percent imperviousness)	100 90 80	--- --- ---	--- --- ---
Multi-Family Residential (40-60 percent imperviousness)	100 90 80	--- --- ---	--- --- ---
Office (50-60 percent imperviousness)	100 90 80	--- --- ---	--- --- ---
Light Industrial (60-70 percent imperviousness)	100 90 80	--- 5-10 20-25	--- 2 7
Heavy Industrial (80-90 percent imperviousness)	100 90 80	--- 15-20 * 35-40	--- 5 10
Commercial (80-90 percent imperviousness)	100 90 80	--- 15-20 * 35-40	--- 5 10

* Indicates that such extensive use of swale BMPs may not be practicable for this land use.

Table 1-3-8

SUPPLEMENTAL BMP REQUIREMENTS FOR EXTENDED DRY DETENTION BMPs

LAND USE	EXTENDED DRY DETENTION BMP COVERAGE (% OF PROJECT AREA)	SUPPLEMENTAL BMP REQUIREMENT (% OF PROJECT AREA)	
		SWALE BMPs	NATURAL OPEN SPACE
Single-Family Residential (0-36 percent imperviousness)	100 90 80	No BMPs No BMPs No BMPs	No BMPs No BMPs No BMPs
Single-Family Residential (37-40 percent imperviousness)	100 90 80	--- 10 20	--- 3 6
Multi-Family Residential * (40-60 percent imperviousness)	100 90 80	--- 10-15 20-30	--- 3-4 6-8
Multi-Family Residential * (61-65 percent imperviousness)	100 90 80	5-15 20-30 30-40	1-4 5-8 9-12
Office * (50-60 percent imperviousness)	100 90 80	--- 10-15 25-30	--- 4 8
Light Industrial (60-70 percent imperviousness)	100 90 80	0-25 10-35 ** 25-50	0-7 4-11 8-15
Heavy Industrial *** (80-90 percent imperviousness)	100 90 80	N/A N/A N/A	N/A N/A N/A
Commercial *** (80-90 percent imperviousness)	100 90 80	N/A N/A N/A	N/A N/A N/A

* Oversized extended detention storage zone (such as, sized for two times "water quality volume") is required for development with more than 55 percent imperviousness.

** Indicates that such extensive use of swale BMPs may not be practicable for this land use.

*** Based on the BMP Technology Criteria Matrix (Table 1-3-4), the use of extended dry detention is not appropriate for this impervious cover category.

Table 1-3-9

SUPPLEMENTAL BMP REQUIREMENTS FOR MODIFIED EXTENDED DRY DETENTION BMPs

LAND USE	MODIFIED EXTENDED DRY DETENTION BMP COVERAGE (% OF PROJECT AREA)	SUPPLEMENTAL BMP REQUIREMENT (% OF PROJECT AREA)	
		SWALE BMPs	NATURAL OPEN SPACE
Single-Family Residential * (20-40 percent imperviousness)	100 90 80	N/A N/A N/A	N/A N/A N/A
Multi-Family Residential * (40-60 percent imperviousness)	100 90 80	N/A N/A N/A	N/A N/A N/A
Office * (50-60 percent imperviousness)	100 90 80	N/A N/A N/A	N/A N/A N/A
Light Industrial (60-70 percent imperviousness)	100 90 80	--- 5-10 20-25	--- 2 7
Heavy Industrial (80-90 percent imperviousness)	100 90 80	--- 15-20 ** 35-40	--- 5 10
Commercial (80-90 percent imperviousness)	100 90 80	--- 15-20 ** 35-40	--- 5 10

* Based upon the BMP Technology Criteria Matrix (Table 1-3-4), the use of modified extended dry detention is not required for this impervious cover category.

** Indicates that such extensive use of swale BMPs may not be practicable for this land use.

Table 1-3-10

SUPPLEMENTAL BMP REQUIREMENTS FOR INFILTRATION BMPs (DEVELOPMENT PROJECTS THAT ARE LESS THAN FIVE ACRES)

* LAND USE	INFILTRATION BMP COVERAGE (% OF PROJECT AREA)	SUPPLEMENTAL BMP REQUIREMENT (% OF PROJECT AREA)	
		SWALE BMPs	NATURAL OPEN SPACE
Single-Family Residential (20-40 percent imperviousness)	100 90 80	N/A N/A N/A	N/A N/A N/A
Multi-Family Residential (40-55 percent imperviousness)	100 90 80	N/A N/A N/A	N/A N/A N/A
Office (56-60 percent imperviousness)	100 90 80	--- --- ---	--- --- ---
Light Industrial (60-70 percent imperviousness)	100 90 80	--- 5-10 20-25	--- 2 7
Heavy Industrial (80-90 percent imperviousness)	100 90 80	--- 15-20 ** 35-40	--- 5 10
Commercial (80-90 percent imperviousness)	100 90 80	--- 15-20 ** 35-40	--- 5 10

* Infiltration BMPs are not recommended for residential land uses.

** Indicates that such extensive use of swale BMPs may not be practicable for this land use.

1.44.4 Use of Natural Open Space. A potential application of supplemental BMPs that may be acceptable in some situations but is not covered by Tables 1-3-6 through 1-3-10 is the dedication of natural open space to offset a shortfall in BMP coverage for swale BMPs serving single-family residential development projects that are less than five acres in size. If the swale BMP drains only 90 percent of the developed area, a minimum of three percent of the project area must be dedicated to natural open space. If the swale BMP coverage is 80 percent of the developed area, the minimum natural open space requirement is six percent of the project area.

1.45 CBLAD BMP REQUIREMENTS FOR REDEVELOPMENT

1.45.1 Pollution Reduction Standards. Table 1-3-11 summarizes BMP options for redevelopment projects in the City of Newport News to comply with the CBLAD 10-percent pollution loading reduction standard. The table shows BMP requirements for three different redevelopment land use categories. The BMP efficiency requirements are based on a comparison of annual total P loadings for the redevelopment and pre-development land use categories, based upon the City pollution loading factors derived from its NPDES monitoring. In cases where the pollution loadings for the pre-development land use category exceed the pollution loadings for the redevelopment land use, the table indicates that no BMPs are required. In cases where the redevelopment is a mixed land use project, the BMPs associated with the most intensive redevelopment land uses should be selected from the table for application to the entire site. Alternatively, the applicant could calculate the required BMP efficiency for the mixed use site and then select an appropriate BMP from the list in Table 1-3-1.

1.45.2 Chesapeake Bay Management Area Standards. The State Chesapeake Bay regulations require that redevelopment projects in Chesapeake Bay management areas achieve a 10 percent reduction in the annual total P loading compared to the existing stormwater load from the site.

Table 1-3-11

BMP REQUIREMENTS FOR REDEVELOPMENT PROJECTS (CBLAD 10-PERCENT REDUCTION STANDARD)

PRE-DEVELOPMENT LAND USE	REDEVELOPMENT LAND USE		
	COMMERCIAL OR HEAVY INDUSTRIAL (80-90% imperviousness)	**OFFICE OR LIGHT INDUSTRIAL (50-70% imperviousness)**	**MULTI-FAMILY (MF) RESIDENTIAL (40-55% imperviousness)**
Commercial or Heavy Industrial (80-90% imperviousness)	• Swale BMPs • Natural Open Space	• No BMPs are required to comply with CBLAD regulations	• No BMPs are required to comply with CBLAD regulations
Office or Light Industrial (50-70% imperviousness)	• Extended Dry Detention • * Wet Detention • Infiltration	• Swale BMPs • Natural Open Space	• No BMPs are required to comply with CBLAD regulations
Multi-Family (MF) Residential (40-55% imperviousness)	• * Wet Detention • Modified Extended Dry Detention • Infiltration	• Extended Dry Detention • * Wet Detention • Infiltration • Swale BMPs	• Swale BMPs • Natural Open Space
Single-Family (SF) Residential (20-40% imperviousness)	• * Wet Detention • Modified Extended Dry Detention • Infiltration	• * Wet Detention • Modified Extended Dry Detention • Infiltration	• Extended Dry Detention • Wet Detention • Swale BMPs

* Wet detention BMPs are suitable for development sites that are 10 acres or greater in size.

1.46 BMP DESIGN

1.46.1 <u>Stormwater Management Plan</u>. As part of the City plan of development process, the applicant for any new development or redevelopment covered by the City Chesapeake Bay Preservation Ordinance, Reservoir Protection Ordinance, and/or Stormwater Management Ordinance shall submit a Stormwater Management Plan to the Director for review and approval. An approved stormwater management plan shall be deemed to satisfy the runoff control permit requirements of the City Reservoir Protection Ordinance. The stormwater management plan shall be prepared by a registered Professional Engineer or Class IIIB Land Surveyor and shall contain maps, charts, graphs, tables, photographs, narrative descriptions, explanations, and citations to supporting references as appropriate to communicate the required information. At a minimum, the stormwater management plan must contain the following information:

a. The designation and location of the primary BMP based upon the BMP technology criteria matrix for new development in Table 1-3-4 or BMP requirements for redevelopment projects in Table 1-3-11.

b. Design of all stormwater management facilities according to the design criteria presented in this manual.

c. If the primary BMP does not drain 100 percent of the development site area, supplemental BMPs shall be designated, located and designed pursuant to the guidelines and the BMP design criteria presented in this chapter.

d. Calculations which demonstrate that the stormwater management facility satisfies the peak runoff performance standard specified by the Director.

e. Site-specific facilities shall be designed for the ultimate development of that site based on zoning, comprehensive plans, or other similar planning documents.

f. All engineering calculations must be performed in accordance with procedures outlined in this chapter or the most current edition of the CBLAD *Local Assistance Manual*, *Virginia Erosion and Sediment Control Handbook*, or the Virginia Department of Transportation *Drainage Manual*.

g. The plan shall establish a long-term schedule for inspection and maintenance of stormwater management facilities that addresses all maintenance requirements and identifies all persons/agencies responsible for performing maintenance.

1.46.2 Guidelines. The following sections provide design guidelines for approved BMPs for water quality control. These design guidelines comply with the structural BMP requirements of the State Stormwater Management Regulations, the State Chesapeake Bay Regulations, the NPDES Stormwater Discharge Permit Regulations, and the City Reservoir Protection Ordinance. The design criteria for water quality control measures presented herein should be used in conjunction with other relevant sections for stormwater quantity control. Design guidelines are presented for the following BMPs approved for use in the City of Newport News:

- Wet Detention BMP
- Extended Dry Detention BMP
- Modified Extended Dry Detention BMP
- Infiltration BMP -- Trench
- Infiltration BMP -- Dry Well
- Grassed Swale with Check Dams BMP
- Biofiltration Swale BMP

1.47 WET DETENTION BMP

1.47.1 Description:

a. A wet detention basin is an impoundment formed by constructing a dam or embankment, or by a combination of excavation and an embankment, with an outlet structure to maintain a permanent pool and regulate the outflow of upstream stormwater discharges. In the general literature and Federal/State regulations for stormwater pollution control, a wet detention BMP is also sometimes referred to as a Awet pond@ or a Aretention basin.@

b. Figure 1-3-B presents a schematic of a wet detention basin. The permanent pool is maintained to provide stormwater pollution control benefits. Pollutant removal is achieved through processes which include sedimentation and biological uptake.

Figure 1–3–B

SCHEMATIC OF WET DETENTION BASIN BMP

NO SCALE

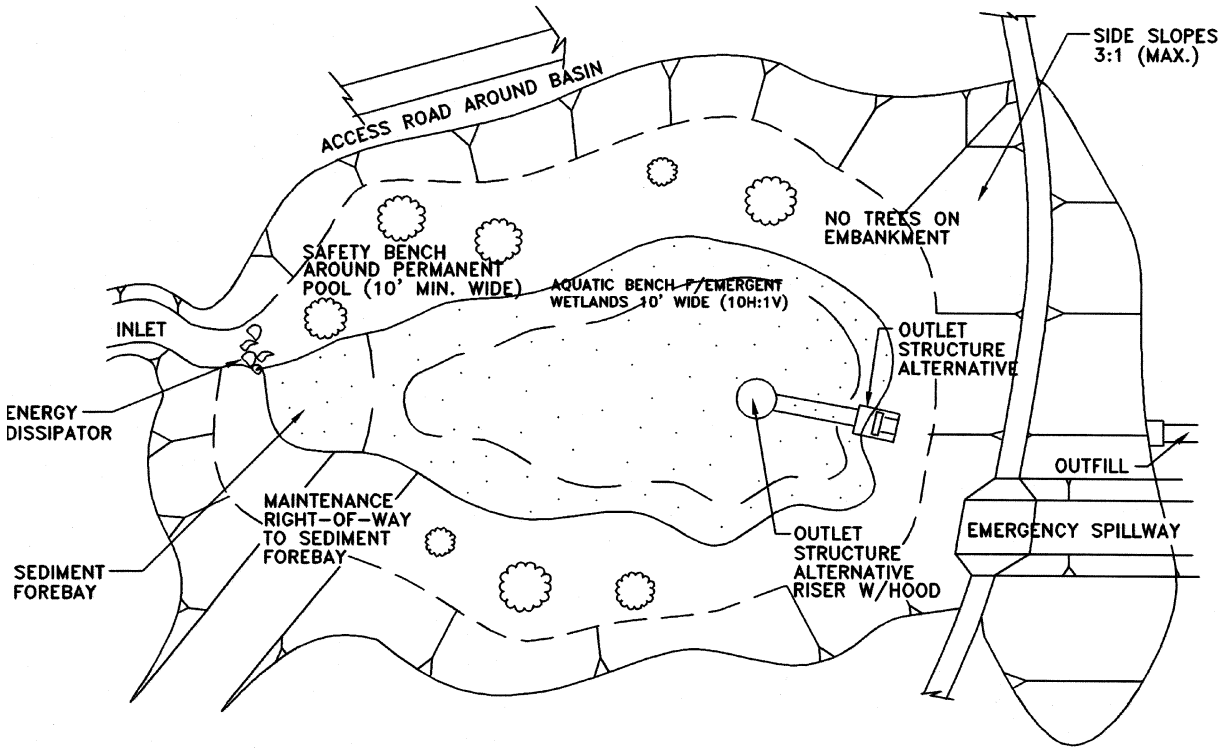

c. Wet detention basins can also be designed to provide peak-shaving control (such as, reductions in peak runoff flows from upstream areas) by regulating the outflow peak discharge and temporarily storing excess flow volumes above the permanent pool storage zone. An emergency spillway is required to pass extreme flood events to protect the embankment from damage due to overtopping.

1.47.2 Applicability:

a. Wet detention basin BMPs are required for new development in water supply watersheds and are an appropriate BMP option for both residential and nonresidential development in Chesapeake Bay management areas and in other sections of the City (see Table 1-3-4). This BMP is restricted to sites with a minimum drainage area of 10 acres, since dry weather flow is required to minimize the drawdown of the permanent pool during extended dry periods.

b. There are basically two types of wet detention basins:

(1) Smaller ponds that are used as onsite controls for drainage areas ranging from 10 to 50 acres.

(2) Larger regional wet detention basins that control drainage areas up to about 300 acres and usually involve multiple development sites.

c. The applicability of a wet detention basin to a site will depend on site topography, drainage area (for example, 10-acre minimum), soil conditions, wetlands constraints, space availability, and accessibility. Where possible, wet detention basins should conform to the existing topography with a minimal amount of excavation required. Soils should not be highly permeable to facilitate maintenance of a permanent pool. Consideration should also be given to the depth to bedrock, to the location of existing underground utilities, and to minimizing impacts on low marshy areas where wetland permits may be required.

1.47.3 Planning Considerations:

a. Wet detention basins provide both water quality and erosion/flood control benefits. Permanent pool sizing criteria to achieve required water quality control are presented below. Erosion and flood control goals and policies must also be

considered in sizing the detention storage zone and outlet structure for multi-purpose basins.

b. Wet detention basin(s) must be sited to control at least 80 percent of the development site area. Multiple detention basins may be required to achieve 80 percent coverage of large development sites. As outlined in Table 1-3-7, supplemental BMPs may be required if the wet detention BMP(s) cannot control 100 percent of the development site areas.

1.47.4 Design Criteria:

a. Permanent Pool Storage Volume and Dimensions:

(1) Permanent pool storage volume shall be at least four times the "water quality volume" specified in the State Stormwater Management Regulations (0.5 inch of runoff per impervious acre). The required storage volume for the permanent pool in acre-feet may be determined by multiplying the total impervious area in acres of the development site by 0.167 ft (which results from: 4.0 times 0.5 inch of runoff divided by 12 inches).

(2) Mean depth of the permanent pool is calculated by dividing the storage volume by the surface area. A mean depth of three to seven feet should maintain an acceptable environment within the permanent pool for the storage volume and associated average hydraulic residence time recommended herein.

(3) Maximum depth of the permanent pool shall be no greater than 12 feet to minimize thermal stratification.

(4) An adequate length/width ratio can help maximize plug flow conditions in order to enhance sedimentation, minimize short-circuiting, and also help prevent vertical stratification. Therefore, a minimum length/width ratio of 3:1 is recommended as a planning goal for the permanent pool of wet detention basin BMP. In addition, the location of the outlet structure should maximize travel time from the inlet to the outlet.

(5) In order to promote the growth of wetland vegetation along the shoreline, a littoral zone with a minimum width of 10 feet and sides no steeper than 10:1 shall be provided. The side slopes shall also be topsoiled, mucked, or planted from two feet below to one foot above the permanent pool elevation to promote wetland vegetation. A safety bench with a minimum width of 10

feet should be provided around the permanent pool. The safety bench area will also facilitate maintenance activities.

b. Storage capacity shall be provided above the permanent pool for the control of post-development peak runoff from the stormwater management design storm(s) specified in Part Two. The necessary storage capacity and peak release rate shall satisfy the peak runoff performance standard for the development site.

c. Embankment Cross-Section:

(1) The embankment shall have a minimum top width of 15 feet.

(2) The embankment shall have side slopes no steeper than 3:1, preferably flatter, and be planted with turf-forming grasses.

(3) The elevation of the water surface in the basin with the emergency spillway flowing at design depth shall be at least one foot below the minimum elevation at the top of the settled embankment.

d. Outlet:

(1) The preferred outlet structure shall consist of a solid (non-perforated), vertical riser pipe or box of reinforced concrete joined by a watertight connection to a horizontal pipe (barrel) extending through the embankment and outletting beyond the downstream toe of the fill. Site conditions may warrant other configurations.

(2) The crest of the outlet riser shall be set at the elevation required to maintain the permanent pool storage capacity specified in this section.

(3) The capacity of the outlet riser/horizontal pipe shall be based upon the performance standard for post-development peak runoff specified in Part Two.

(4) The base of the outlet riser shall be firmly anchored to prevent floatation.

(5) An anti-vortex device and trash rack shall be attached to the top of the outlet riser to improve the flow of water into the riser and to prevent debris from being carried out of the basin.

(6) Anti-seep collars shall be installed around the barrel of the horizontal outlet pipe according to the criteria presented in the latest edition of the *Virginia Erosion and Sediment Control Handbook*.

(7) A pipe with a suitable valve shall be provided to completely drain the permanent pool to facilitate maintenance activities.

e. Each wet detention basin shall be provided with an emergency spillway designed to pass runoff produced by the 100-year storm event without damage to the impoundment structure. Earthen emergency spillways should be trapezoidal in cross-section and designed for non-erosive velocities. The spillway should be constructed in such a manner as to prevent the discharge through the spillway from impinging on the toe of the dam or principal embankment structure. Exceptions to this requirement will be considered on a case-by-case basis.

f. At points of inflow to the wet detention basin, energy dissipaters, such as riprap, should be used to reduce the velocity of flow. The outflow channel below the horizontal pipe outfall should be designed to protect against erosion and scour from high velocities and turbulence. Riprap on filter fabric shall be provided at the points of discharge as necessary.

g. The designer shall include a sediment forebay located near the inlet to the permanent pool (space permitting) to trap coarse sediment particles as well as some of the trash and debris in stormwater discharges and to facilitate major cleanout activities. The forebay storage capacity should be 10 percent of the permanent pool storage volume to accommodate sediment accumulations over a 10- to 20-year period. Access for mechanized equipment should be provided to permit the removal of sediment deposits. The forebay can be distinguished from the permanent pool by one of several means: a lateral sill with wetland vegetation; two ponds in series; differential pool depth; rock-filled gabions or a retaining wall; or a horizontal rock filter placed laterally across the permanent pool.

h. A permanent easement that is at least 15 feet in width around the perimeter of the wet detention basin shall be provided for maintenance purposes. The easement shall be measured from the top edge of the embankment slope. An easement also shall be provided for access to the detention basin site. This easement shall

be at least 15 feet in width. The grading of access routes to and around the facility shall provide slopes that will safely accommodate maintenance and operating vehicles.

i. Information/warning signs shall be posted in conspicuous places around wet detention BMPs. As a minimum, these signs shall contain language that prohibits swimming, ice skating and other activities considered to be dangerous or inappropriate.

1.47.5 Maintenance:

a. To provide effective, continuing stormwater pollution control, periodic maintenance of the wet detention basin BMP is necessary. Maintenance requirements are identified in two categories as follows:

(1) **Routine Maintenance** involves tasks that are performed on some regular basis during the year and are viewed as preventive in nature and are intended to enhance the aesthetic quality of the facility. Examples are periodic site inspections, grass mowing, debris and trash removal, bank stabilization, weed control, insect or mosquito control, fence repair, and record-keeping.

(2) **Non-Routine Maintenance** involves tasks that are performed once every specified number of years to correct problems that might reduce the detention facility's structural integrity or effectiveness. Examples of structural repairs, which will probably be required at 10- to 15-year intervals on the average, include the replacement of outlet pipes and endwalls. Major cleanout operations to remove accumulated sediment and debris are typically required on the order of once every 10 years. A major cleanout is intended to maintain the required pollution removal efficiency, and also to eliminate the buildup of sediments that might significantly detract from the facility's appearance. Cleanout operations typically include material removal, stabilization of the detention facility, and offsite hauling for sediment disposal.

b. Wet detention basins are water quality management facilities designed to achieve runoff pollution removal through natural physical, biological, and chemical processes within the permanent pool. Although these facilities may resemble small lakes, their primary purpose is to achieve water quality management benefits rather than recreational or aesthetic benefits. Likewise, these facilities are likely to exhibit storage depletion

between major cleanouts due to the accumulations of sediment and debris that the basins are designed to achieve. Since the facilities are primarily water quality management devices, it is important that the scope of and schedule for maintenance activities be governed by pollution removal criteria rather than concerns about preserving any recreational or aesthetic benefits.

1.48 EXTENDED DRY DETENTION BMP

1.48.1 Description. An extended dry detention basin is an impoundment formed by constructing a dam or embankment with an outlet structure to temporarily detain stormwater during and immediately following a storm event. Figure 1-3-C presents a schematic of an extended dry detention basin with a two-stage design, which is described below. Pollutant removal is achieved primarily by sedimentation while the detention basin is being dewatered following the storm event. Extended detention basins can also provide peak-shaving control by regulating the outflow peak discharge and storing flood volumes within the detention basin. An emergency spillway is designed to pass peak flows from extreme flood events to protect the dam from damage due to overtopping.

1.48.2 Applicability:

a. As indicated in Table 1-3-4, extended dry detention is an appropriate BMP option for the following conditions:

(1) Water Supply Watersheds: residential and nonresidential (up to 70 percent imperviousness) development projects where it is not feasible to use wet detention BMPs.

(2) Chesapeake Bay Management Areas: residential and nonresidential development projects (up to 55 percent imperviousness).

(3) Other Sections of the City: residential and nonresidential development projects of any size.

b. The applicability of extended dry detention to a particular site generally depends on the site topography, drainage area, space availability, and accessibility. Typically, an extended dry detention basin is preferable (from a permitting standpoint) for sites where wetlands tend to restrict the use of wet detention.

Figure 1–3–C

SCHEMATIC OF EXTENDED DRY DETENTION BASIN BMP
(TWO–STAGE DESIGN)

NTS

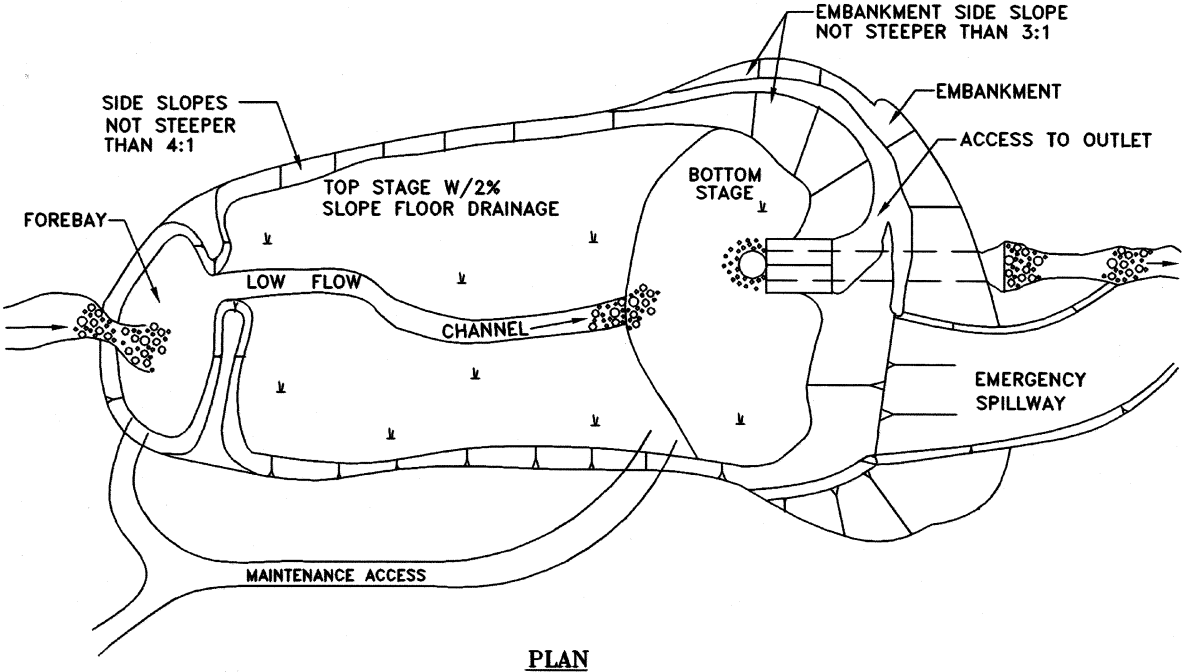

PLAN

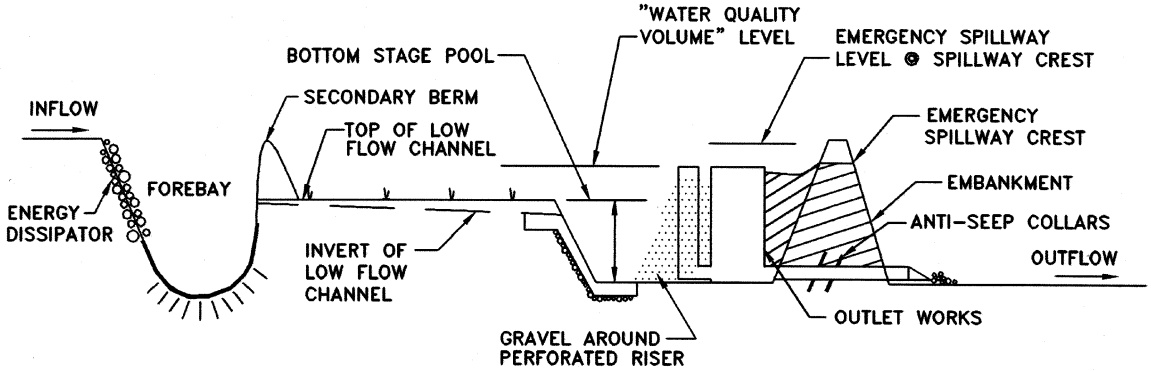

PROFILE

c. The drainage area of an onsite extended detention basin (i.e., controlling a single development site) is generally less than 50 acres. Regional extended dry detention basins (i.e., controlling multiple development sites) can control up to 300 acres.

1.48.3 Planning Considerations:

a. Extended dry detention basins can be sized to achieve both water quality and erosion/flood control benefits. Sizing criteria to achieve required erosion/flood control goals and/or policies must also be considered in sizing the detention storage zone and outlet structure for multi-purpose basins.

b. Extended dry detention basin(s) must be sited to control at least 80 percent of the development site area. Multiple detention basins may be required to achieve 80 percent coverage of large development sites. As outlined in this chapter (Table 1-3-8), supplemental BMPs are required if the extended dry detention BMP(s) cannot control 100 percent of the development site area.

1.48.4 Design Criteria:

a. Extended Detention Storage Volume and Dimensions:

(1) The storage capacity of the extended detention storage zone shall be no less than the Awater quality volume@ specified in the City Stormwater Control Regulations. The required volume of the extended detention storage in acre-feet may be calculated by multiplying the total impervious area in acres by 0.042 ft (which results from: 0.5 inch of runoff divided by 12 inches).

(2) The water quality volume stored in the extended detention zone shall be released over a minimum of 30 hours. This is a brim-full drawdown time based on dewatering the design water quality volume over a minimum of 30 hours. To minimize the risk of carryover storage from one storm event to the next, the maximum dewatering period for brim-full conditions shall be 48 hours. To ensure a reasonable detention time for minor storm events that produce stormwater runoff volumes less than the design water quality volume, the basin outlet shall be designed to dewater the initial 50 percent of the water quality volume storage over a minimum period of 20 hours (i.e., this minimum 20-hour dewatering period should be calculated for a pool depth corresponding to the initial 50 percent of extended detention storage).

(3) By maximizing the distance between the inlet and outlet points, the greatest opportunity for suspended solids settling is obtained. Therefore, a minimum length/width ratio of 3:1 is recommended as a planning goal for the extended detention storage zone. Note that length is defined by the distance from the inflow point to the outflow point, and width is defined as the surface area divided by the length.

(4) The side slopes of the detention basin should be no steeper than 4:1, preferably flatter, in order to reduce erosion potential, minimize safety hazards, improve aesthetics and facilitate maintenance access and activities. The floor of the basin should have a minimum slope of two percent toward the low flow channel.

(5) To improve the appearance of the extended dry detention basin, a two-stage design is recommended where feasible. With a two-stage design (see Figure 1-3-C), the majority of deposited materials will accumulate in the bottom stage, which can be sized to accept regular inundation from minor rain storms. The top stage is intended to be dry except for stormwater runoff from larger, less frequent storm events. The bottom stage typically can be one and one-half to three feet deeper than the top stage and should be sized to store up to 50 percent of the water quality volume (i.e., bottom stage should have a storage capacity of up to 0.25 inch of runoff per impervious acre). A bottom stage storage volume equivalent to 50 percent of the water quality volume should capture stormwater discharges from more than 50 percent of the storm events each year, thus keeping the top stage dry most of the time.

(6) A paved low flow channel should be provided to carry runoff from minor storms through the top stage to the bottom stage (two-stage design) or through the upper end of the extended detention zone to the outlet works (single-stage design). For a two-stage design, erosion protection should be provided at the location where the low flow channel discharges into the bottom stage.

b. Additional storage capacity shall be provided above the extended detention storage zone for the control of post-development peak runoff from the stormwater management design storm(s) specified in Part Two. The necessary storage capacity and peak release rate shall satisfy the peak runoff performance standard for the development site.

c. Embankment Cross-Section:

(1) The embankment shall have a minimum top width of 15 feet.

(2) The embankment shall have side slopes no steeper than 3:1, preferably flatter, and shall be planted with turf-forming grasses.

(3) The elevation of the water surface in the basin with the emergency spillway flowing at design depth shall be at least one foot below the minimum elevation at the top of the settled embankment.

d. Outlet(s):

(1) The required dewatering period for the design storage volume can be achieved by a number of different outlet configurations based on adaptations to conventional outlets for peak-shaving detention basins. Recent studies have found that vertical riser pipes that are perforated or slotted to achieve the required extended detention times exhibit less severe clogging problems than horizontal perforated outlets with a gravel jacket. The use of vertical perforated/slotted risers is preferred. These studies have also concluded that the minimum diameter of riser perforations should be 0.75-inch to 1.0-inch to minimize clogging problems. Figure 1-3-D shows an example of a vertical perforated riser outlet structure that is used in conjunction with a weir box opening to achieve peak-shaving requirements for larger storms. As shown in the figure, gravel (1.5-inch to 3-inch rock) should be packed in the shape of a cone around the vertical perforated/slotted riser to protect the extended dry detention outlet from clogging due to trash and debris. If the extended dry detention outlet is not protected by a gravel cone, a trash rack of sufficient size should be provided.

(2) The extended dry detention basin shall include an outlet to release stormwater discharges that exceed the water quality volume and to satisfy the peak-shaving requirements specified in Part Two. The preferred outlet structure shall consist of a vertical riser pipe or box of reinforced concrete joined by a watertight connection to a horizontal pipe (barrel) extending through the embankment and outletting beyond the downstream toe of the fill. The riser pipe or box outlet may be the same outlet structure used to dewater the extended dry detention storage or a

separate structure. The design elevation(s) of the peak-shaving outlet(s) shall be set at the elevation(s) required to maintain the extended dry detention storage capacity and satisfy the peak-shaving performance standards.

(3) The base of the extended detention riser and the peak-shaving riser shall be firmly anchored to prevent floatation.

(4) An anti-vortex device and trash rack shall be attached to the top of the peak-shaving riser pipe or box outlet to improve the flow of water into the riser or box and to prevent floating debris from being carried out of the detention basin.

(5) Anti-seep collars shall be installed around the barrel of the horizontal outlet pipe according to the criteria presented in the latest edition of the *Virginia Erosion and Sediment Control Handbook*.

e. Each extended dry detention basin shall be provided with an emergency spillway designed to pass runoff produced by the 100-year storm event without damage to the impoundment structure. Earthen emergency spillways should be trapezoidal in cross-section and designed for non-erosive velocities. The spillway should be constructed in such a manner as to prevent the discharge through the spillway from impinging on the toe of the dam or principal embankment structure. Exceptions to this requirement will be considered on a case-by-case basis.

f. At points of inflow to the extended dry detention basin, energy dissipaters, such as riprap, should be used to reduce the velocity of flow. The outflow channel below the horizontal pipe outfall should be designed to protect against erosion and scour from high velocities and turbulence. Riprap on filter fabric should be provided at the points of discharge as necessary.

g. If desired and space permits, a sediment forebay can be located near the inlet to the extended dry detention basin to trap coarse sediment particles as well as some of the trash and debris in stormwater discharges. The deposition of sediment near the inlet will reduce the frequency of major sediment cleanouts within the main basin, although major cleanouts will still be required. When used, the forebay storage capacity should be at least 10 percent of the water quality volume to accommodate sediment accumulations over a two- to five-year period.

Figure 1–3–D

SCHEMATIC OF PERFORATED RISER OUTLET FOR EXTENDED DRY DETENTION BASIN

NO SCALE

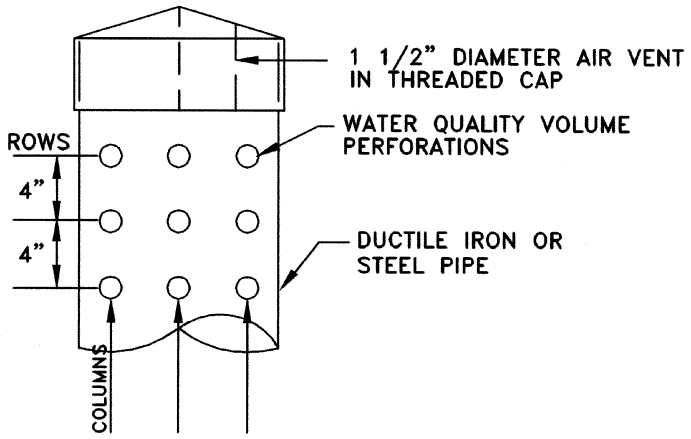

RISER PIPE DETAIL

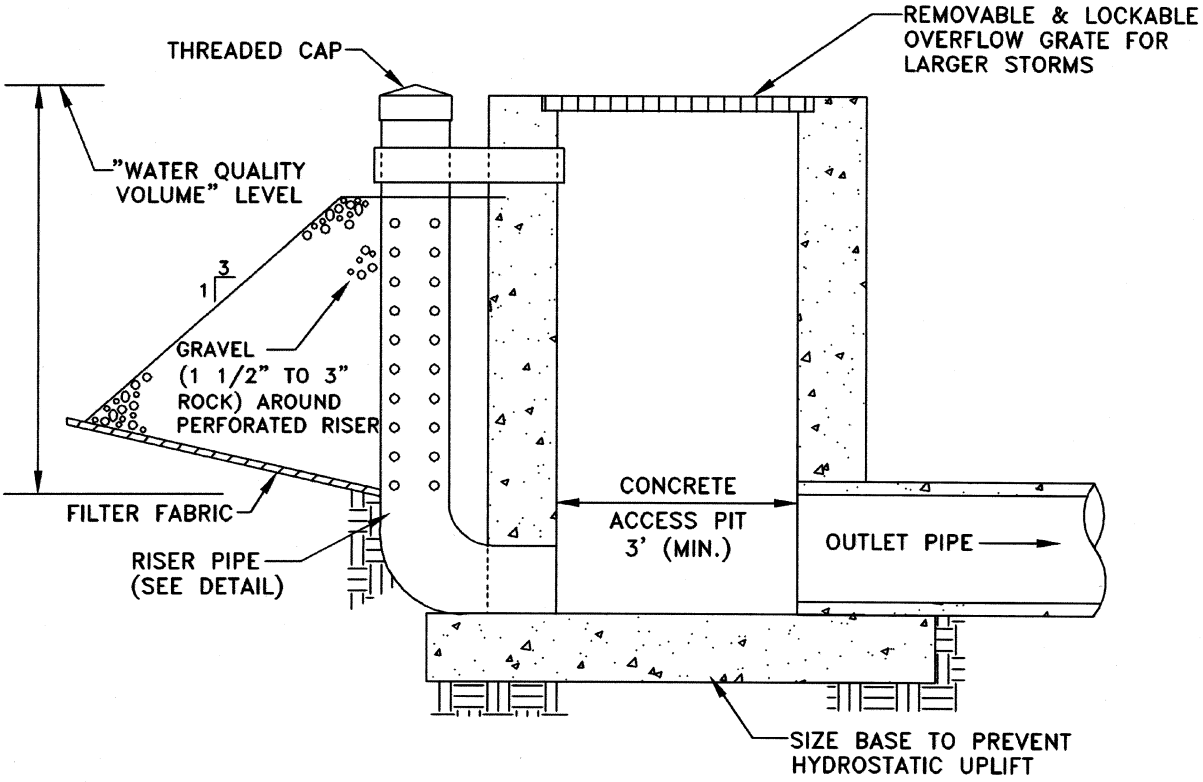

NOTE: The outlet pipe shall be sized to control overflow into the concrete riser.

h. A permanent easement that is at least 15 feet in width around the perimeter of the extended dry detention basin shall be provided for maintenance purposes. The easement shall be measured from the top edge of the embankment slope. An easement that is at least 15 feet in width shall be provided also for access to the detention basin site. The grading of access routes to the facility and around the facility shall provide slopes that will safely accommodate maintenance and operating vehicles.

1.48.5 Maintenance. In order to provide effective stormwater pollution control on a continuing basis, periodic maintenance of the extended dry detention basin BMP is necessary. Maintenance requirements are identified in two categories as follows:

a. **Routine Maintenance** involves tasks that are performed on some regular basis during the year and are viewed as preventive in nature and are intended to enhance the aesthetic quality of the facility. Examples are periodic site inspections, grass mowing, debris and trash removal, clearing around the extended detention outlet structure to prevent clogging, bank stabilization, weed control, insect or mosquito control, fence repair, and record-keeping. An extended dry detention BMP will typically require more frequent routine maintenance than will a wet detention BMP to maintain the aesthetic quality of the facility.

b. **Non-Routine Maintenance** involves tasks that are performed once every specified number of years to correct problems that might reduce the effectiveness or structural integrity of the detention facility. Examples of structural repairs, which will probably be required at 10- to 15-year intervals on the average, include the replacement of outlet structures and endwalls. Major cleanouts are intended to maintain the required water quality storage capacity and also to eliminate the buildup of accumulated sediments and debris that might significantly detract from the appearance of the facility. Cleanout operations typically include material removal, stabilization of the detention facility, and offsite hauling for sediment disposal. At a minimum, a major cleanout should be performed at an extended dry detention BMP when the accumulated sediment has depleted 20 percent of the water quality volume. Based on typical annual sediment loading rates in urban stormwater discharges, approximately five to 10 years will usually be required to deplete 20 percent of the water quality volume, assuming limited or no sediment removal in an upstream forebay. However, to minimize the risk of clogging the extended detention outlet structure, major cleanout operations may be required as

frequently as every three to five years. If the facility is not cleaned out at the required intervals, it is likely that the extended detention outlet will clog and that the facility will begin to operate as an undersized wet detention basin (i.e., a small permanent pool will form).

1.49 MODIFIED EXTENDED DRY DETENTION BMP

1.49.1 Description:

a. This BMP consists of a two-stage extended dry detention basin with a shallow marsh in the bottom stage to achieve enhanced nutrient removal (see Figure 1-3-E). The shallow marsh is supported by a permanent pool (maximum depth of approximately 18 inches) and an overlaying extended dry detention zone (12 to 18 inches deep). In addition to removal of suspended pollutants by sedimentation, the shallow marsh should achieve removal of some dissolved nutrients. It is estimated that the shallow marsh can increase the annual removal of total P from 30 to 40 percent for a conventional extended dry detention basin to 50 to 60 percent for a modified extended dry detention basin.

b. Like conventional extended dry detention basins, a modified extended dry detention basin can be designed to provide peak-shaving control by reducing the peak outflow and storing flood volumes within the detention basin.

1.49.2 Applicability:

a. As indicated in Table 1-3-4, modified extended dry detention basin BMPs are appropriate for situations where conventional extended dry detention cannot achieve adequate pollutant removal and the use of wet detention is constrained by factors such as existing wetlands or space limitations. Conditions suitable for modified extended dry detention are as follows:

(1) Highly impervious (greater than 50 percent imperviousness) development projects in water supply watersheds where it is not feasible to use wet detention BMPs.

(2) Highly impervious (greater than 50 percent imperviousness) development projects in Chesapeake Bay Management Areas.

Figure 1–3–E

SCHEMATIC OF MODIFIED EXTENDED DRY DETENTION BASIN BMP

NO SCALE

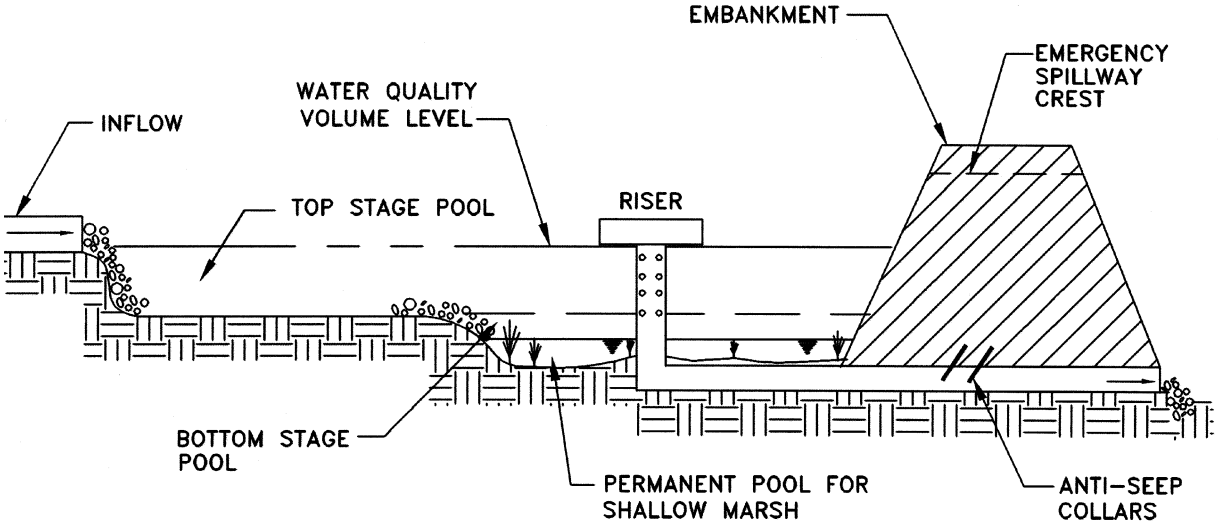

(3) Since the State Stormwater Management Regulations can be satisfied with conventional extended dry detention BMPs in other sections of the City, the use of modified extended dry detention is not necessary in those cases.

b. In addition to applications for specific management areas, modified extended dry detention represents a more feasible alternative than wet detention if an existing wetland area is located at the detention basin site.

1.49.3 Planning Considerations:

a. Modified extended dry detention basins can be sized to achieve both water quality and erosion/flood control benefits. Sizing criteria to achieve required erosion/flood control goals and/or policies must also be considered in sizing the detention storage zone and outlet structure for multi-purpose basins.

b. Modified extended dry detention basin(s) must be sited to control at least 80 percent of the development site area. Multiple detention basins may be required to achieve 80 percent coverage of large development sites. As outlined in Table 1-3-9, supplemental BMPs are required if the modified extended dry detention BMP(s) cannot control 100 percent of the development site area.

1.49.4 Design Criteria. The use of wetlands systems for stormwater pollution control is a fairly new and innovative approach to stormwater management. Summarized herein are general guidelines and criteria for the use of a shallow marsh system to enhance the pollution removal efficiency of an extended dry detention basin. Design engineers should also refer to other documents (for example, MWCOG, October 1992; Strecker, et al) on stormwater wetlands systems for additional information that may be useful in designing the shallow marsh component of this BMP.

a. A two-stage design is required for a modified extended dry detention basin (see Figure 1-3-E). The shallow marsh system is located within the bottom stage. The bottom stage can be approximately three feet deeper than the top stage and should be sized with an extended dry detention storage zone for approximately 50 percent of the water quality volume (i.e., dry detention storage capacity of 0.25 inch of runoff per impervious acre) plus a permanent pool storage zone for the shallow marsh

vegetation (approximately 0.5 inch of runoff). The top stage is intended to be dry except for runoff from larger, less frequent storm events. Therefore, the majority of pollutant removal will occur in the bottom stage. The extended dry detention storage capacity (50 percent of the water quality volume) of the bottom stage should capture stormwater discharges from more than 50 percent of the storm events each year.

b. Based on criteria for stormwater wetlands BMPs in the Mid-Atlantic region, the bottom stage should include a permanent pool with a "hi marsh" zone (from surface of permanent pool to a depth of six inches) and a "lo marsh" zone (from six to 18 inches below the permanent pool). The hi marsh zone typically exhibits a greater diversity and density of emergent wetland plants. Guidelines for stormwater wetlands systems specify that: (1) the surface area of the permanent pool (i.e., shallow marsh wetlands system) should be at least one percent of the BMP drainage area; (2) the total surface area of the permanent pool should be equally distributed between hi marsh and lo marsh (i.e., $Area_{hi} = Area_{lo} =$ 50 percent Permanent Pool Surface Area); and (3) the volume of the permanent pool in the lo marsh zone (six to 18 inches of inundation) should be approximately double the volume in the hi marsh zone (zero to six inches of inundation), which means that approximately two-thirds of the total volume should be in the lo marsh zone and one-third should be in the hi marsh zone. Based on these guidelines, the permanent pool should have a total storage volume of approximately 0.5 inch of runoff, a maximum depth of one and one-half feet, and a mean depth of approximately 0.4 foot. Table 1-3-12 summarizes maximum water depths for emergent wetland plant species recommended for stormwater treatment systems in the Mid-Atlantic region.

c. The total storage capacity of the extended detention storage zone shall be no less than the "water quality volume" specified in the State Stormwater Management Regulations. The required volume of the extended detention storage in acre-feet may be calculated by multiplying the total impervious area in acres by 0.042 (which results from: 0.5 inch of runoff divided by 12 inches). Approximately 50 percent of the extended dry detention storage volume should be located within the bottom stage of the facility (i.e., storage capacity between surface of permanent pool and top rim of the bottom stage). The depth of the extended dry detention zone in the bottom stage should be approximately one to two feet, and in no case deeper than three feet. The depth of this zone needs to be limited because significant changes in water

levels on a frequent basis can exert severe physiological stress on the plant community in the extended dry detention zone. Plant species recommended for this zone include: emergent wetland species such as soft-stem bulrush, sedges, switchgrass and rice cutgrass; trees such as black willow and river birch; and shrubs such as buttonbush and chokecherry.

d. The water quality volume stored in the extended detention zone shall be released over a minimum of 30 hours pursuant to the State Stormwater Management Regulations. This is a brim-full drawdown time based on dewatering the design water quality volume over a minimum of 30 hours. To minimize the risk of carryover storage from one storm event to the next, the maximum dewatering period for brim-full conditions shall be 48 hours. To ensure a reasonable detention time for minor storm events that produce stormwater runoff volumes of less than the design water quality volume, the basin outlet shall be designed to dewater the initial 50 percent of the water quality volume storage over a minimum period of 20 hours (i.e., this minimum 20-hour dewatering period should be calculated for a pool depth corresponding to the initial 50 percent of extended detention storage.)

e. By maximizing the distance between the inlet and outlet point, the greatest opportunity for suspended solids settling is obtained. Therefore, a minimum length/width ratio of 3:1 is recommended as a planning goal for the extended detention storage basin (i.e., top and bottom stage). Note that length is defined by the distance from the inflow point to the outflow point, and width is defined as the surface area divided by the length. As a general rule, the length/width ratio in the shallow marsh system should be greater than or equal to one to prevent short-circuiting. It is advisable to design the wetlands area to achieve a length/width ratio of 2:1 for the dry weather flow path. This can be achieved by placing wedges of hi marsh perpendicular to the flow path to maximize sinuosity.

f. The side slopes of the top stage of the basin should be no steeper than 4:1, preferably flatter, in order to reduce erosion potential, minimize safety hazards, improve aesthetics, and facilitate maintenance access and activities. The floor of the top stage of the basin should have a minimum slope of two percent toward the low flow channel. The floor of the bottom stage should be graded to achieve the specified surface area and water volume distributions of lo marsh and hi marsh.

Table 1-3-12

RECOMMENDED MAXIMUM WATER DEPTHS FOR EMERGENT WETLAND PLANT SPECIES

EMERGENT WETLAND SPECIES	MAXIMUM DEPTH (in inches)
A. PRIMARY SPECIES	
Duck Potato	12
Common Three Square	6
Softstem Bulrush	12
B. SECONDARY SPECIES	
Sweet Flag	3
Button Bush	24
Rose Mallow	3
Halbered-leafed Rose Mallow	3
Rice Cutgrass	3
Spatterdock	60 (24 min)
Arrow-arum	12
Pickerel Weed	12
Lizard's Tail	6
C. EXOTIC OR INVASIVE SPECIES	
Common Reed	3
Common Cattail	12-18
Narrow-leafed Cattail	12

NOTES:
1. These depths can be tolerated, but plant growth and survival may decline under permanent inundation.
2. Primary species are rapid colonizers; secondary species do not spread as rapidly.

SOURCE: MWCOG, October 1992

g. A paved low flow channel should be provided to carry runoff from minor storms through the top stage to the bottom stage of the basin. Erosion protection should be provided at the location where the low flow channel discharges into the bottom stage.

h. Additional storage capacity shall be provided above the extended detention storage zone for the control of post-development peak runoff from the stormwater management design storm(s) specified in Part Two. The necessary storage capacity and peak release rate shall satisfy the peak runoff performance standard for the development site.

i. Embankment Cross-Section:

(1) The embankment shall have a minimum top width of 15 feet.

(2) The embankment shall have side slopes no steeper than 3:1, preferably flatter, and shall be planted with turf-forming grasses.

(3) The elevation of the water surface in the basin with the emergency spillway flowing at design depth shall be at least one foot below the minimum elevation at the top of the settled embankment.

j. Outlet(s):

(1) The criteria and guidelines presented for an extended dry detention BMP also apply to this BMP. The major exception is that the outlet structure for a modified extended dry detention basin must also be designed to maintain a permanent pool for the shallow marsh system.

(2) The modified extended dry detention basin shall include an outlet to release stormwater discharges that exceed the water quality volume and to satisfy the peak-shaving requirements specified in Part Two. This outlet structure shall consist of a vertical riser pipe or box of reinforced concrete joined by a watertight connection to a horizontal pipe (barrel) extending through the embankment and outletting beyond the downstream toe of the fill. The riser pipe or box outlet may be the same outlet structure used to dewater the extended dry detention storage or a separate structure. The design elevation(s) of the peak-shaving outlet(s) shall be set at the elevation(s) required to maintain the

extended dry detention storage capacity and satisfy the peak-shaving performance standards.

(3) The base of the extended detention riser and the peak-shaving riser shall be firmly anchored to prevent floatation.

(4) An anti-vortex device and trash rack shall be attached to the top of the peak-shaving riser pipe or box outlet to improve the flow of water into the riser or box and to prevent floating debris from being carried out of the detention basin.

(5) Anti-seep collars shall be installed around the barrel of the horizontal outlet pipe according to the criteria presented in the latest edition of the *Virginia Erosion and Sediment Control Handbook*.

(6) A pipe with a suitable valve shall be provided to completely drain the permanent pool for maintenance.

k. Each modified extended dry detention basin shall be provided with an emergency spillway designed to pass runoff from produced by the 100-year storm without damage to the impoundment structure. Earthen emergency spillways should be trapezoidal in cross-section and designed for non-erosive velocities. The spillway should be constructed to prevent the discharge through the spillway from impinging on the toe of the dam or principal embankment structure. Exceptions to this requirement will be considered on a case-by-case basis.

l. At points of inflow to the modified extended dry detention basin, energy dissipaters, such as riprap, should be used to reduce the velocity of flow. The outflow channel below the horizontal pipe outfall should be designed to protect against erosion and scour from high velocities and turbulence. Riprap on filter fabric shall be provided at the points of discharge as necessary.

m. If desired and space permits, a sediment forebay can be located near the inlet to the modified extended dry detention basin to trap coarse sediment particles as well as some of the trash and debris in stormwater discharges. The deposition of sediment near the inlet will reduce the frequency of major sediment cleanouts within the main basin, although major cleanouts will still be required. The forebay storage capacity should be 10 percent of the water quality volume to accommodate sediment accumulations over a two- to five-year period.

n. A permanent easement that is at least 15 feet in width around the perimeter of the modified extended dry detention basin shall be provided to facilitate major maintenance activities. The easement shall be measured from the top edge of the embankment slope. An easement also shall be provided for access to the detention basin site. This easement shall be at least 15 feet in width. The grading of access routes to the facility and around the facility shall provide slopes that will safely accommodate maintenance and operating vehicles.

1.49.5 Maintenance. In order to provide effective stormwater pollution control on a continuing basis, periodic maintenance of the modified extended dry detention basin BMP is necessary. Maintenance requirements are identified in two categories as follows:

a. **Routine Maintenance** involves tasks that are performed on some regular basis during the year and are viewed as preventive in nature and are intended to enhance the aesthetic quality of the facility. Examples are periodic site inspections, grass mowing, debris and trash removal, clearing around the extended detention outlet structure to prevent clogging, bank stabilization, weed control, insect or mosquito control, fence repair, and record-keeping.

b. **Non-Routine Maintenance** involves tasks that are performed once every specified number of years to correct problems that might reduce the effectiveness or the structural integrity of the detention facility. Examples of structural repairs, which will probably be required at 10- to 15-year intervals on the average, include the replacement of outlet structures and endwalls. Major cleanouts are intended to maintain the required water quality storage capacity, and also to eliminate the buildup of accumulated sediments and debris that might significantly detract from the appearance of the facility. Cleanout operations typically include material removal, stabilization of the detention facility, and offsite hauling for sediment disposal.

(1) Since there has been very little experience to date with the use of wetlands systems for stormwater pollution control, the non-routine maintenance requirements are fairly speculative. However, sediment should be cleaned out after six inches of deposition or approximately 20 percent storage depletion within the shallow marsh zone. If feasible, the shallow marsh section of the bottom stage should be mucked out with a portable Mudcat or

a backhoe. By stockpiling the top few inches of sediment and replacing it over the wetland surface after clean-up operations are completed, the shallow marsh should reestablish itself through its own seedbanks. However, depending upon the disruption caused by cleanout operations, major replanting of wetland vegetation may be required.

(2) Based on typical annual sediment deposition rates, approximately two to three years will be required to deplete 20 percent of the permanent pool storage in the bottom stage, assuming limited or no sediment removal in an upstream forebay. To minimize the risk of clogging the extended detention outlet structure, major cleanout operations are likely to be required at least every three to five years.

1.50 INFILTRATION BMP

There are two infiltration BMPs approved for use in the City of Newport News: infiltration trench and dry well.

1.50.1 Feasibility Tests. Since infiltration BMPs are only suitable for sites with appropriate soils characteristics and water table conditions, the designer must demonstrate that the proposed BMP site **satisfies** certain **feasibility tests** before a development plan relying on infiltration BMPs will be approved. **Failure** of any of the following four **feasibility tests** means that the proposed BMP site is **not suitable** for infiltration BMPs:

a. The soil beneath the infiltration facility shall exhibit minimum infiltration rates that permit adequate percolation of stored runoff. The minimum infiltration rate is the rate at which water percolates through the soil under saturated conditions. Soils with infiltration rates between approximately 0.5 inch per hour and 2.4 inches per hour are suitable for infiltration practices. This criteria restricts the use of infiltration BMPs to the following soil textures to ensure adequate minimum infiltration rates: loam (0.52 inches/hour); sandy loam (1.02 inches/hour); and loamy sand (2.4 inches/hour).

b. The maximum allowable ponding or storage time within the infiltration facility shall be no more than 48 hours. The maximum design depth for infiltration facilities is a function of the soil infiltration rate, the 48-hour storage time, and the void ratio of the stone aggregate reservoir.

d. The site topography should be considered in locating the infiltration facility, including slope, soils, and the proximity of building foundations. To prevent basement flooding, building foundations shall be at least 10 feet up-gradient from the infiltration facility.

1.50.2 Description:

a. An infiltration trench generally consists of a long, narrow excavation ranging from three to 12 feet in depth that is backfilled with stone aggregate to provide temporary storage of stormwater for subsequent infiltration (see Figure 1-3-F). The inlet mechanism may consist of a stone aggregate surface (see Figure 1-3-F) or a vegetated surface with grate inlets constructed flush with the ground surface (see Figure 1-3-G).

b. A dry well is a small excavated pit that is backfilled with aggregate to provide storage for subsequent infiltration of stormwater to the soil. Figure 1-3-H shows a side view schematic of a dry well. Dry wells generally range from three to 10 feet in depth and are designed to accept piped inflow from a rooftop downspout.

1.50.3 Applicability:

a. Infiltration BMPs are usually designed to capture sheet flow runoff (infiltration trench) or rooftop runoff (dry well) from areas up to about five acres in size. **In the City of Newport News, the use of infiltration BMPs shall be restricted to non-residential development or redevelopment projects that are less than five acres (total) in size.**

b. The applicability of infiltration BMPs to a small non-residential development project will depend on whether the proposed BMP site passes the feasibility tests listed above.

Figure 1–3–F

TYPICAL APPLICATION OF INFILTRATION TRENCH WITH STONE SURFACE

NO SCALE

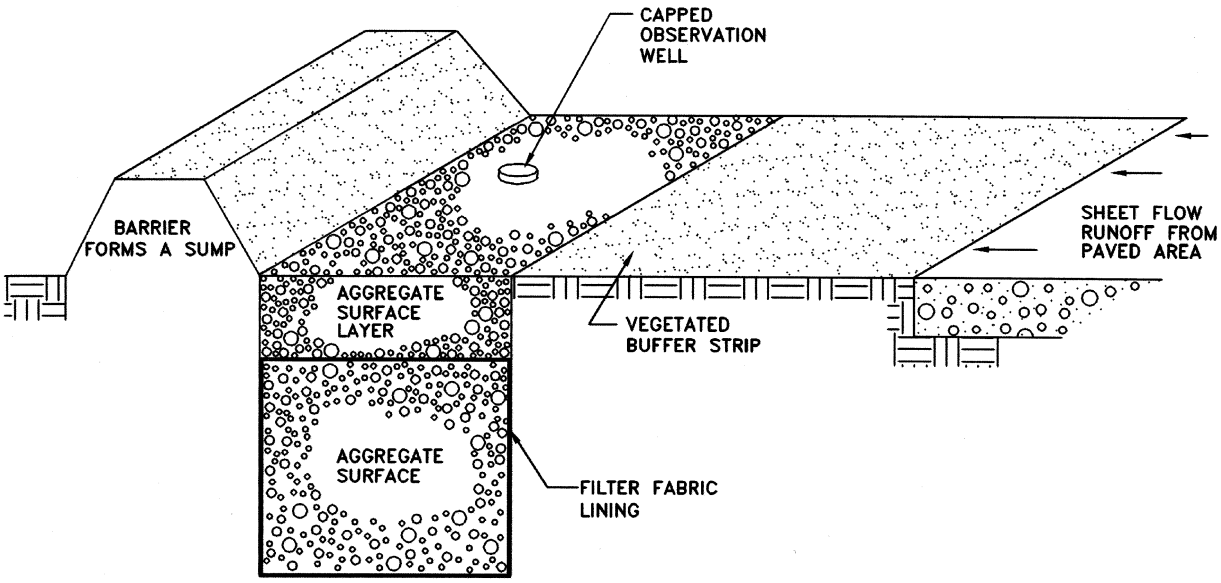

Figure 1–3–G

GRATE AND PERFORATED INLET FOR INFILTRATION TRENCH WITH VEGETATED SURFACE

NO SCALE

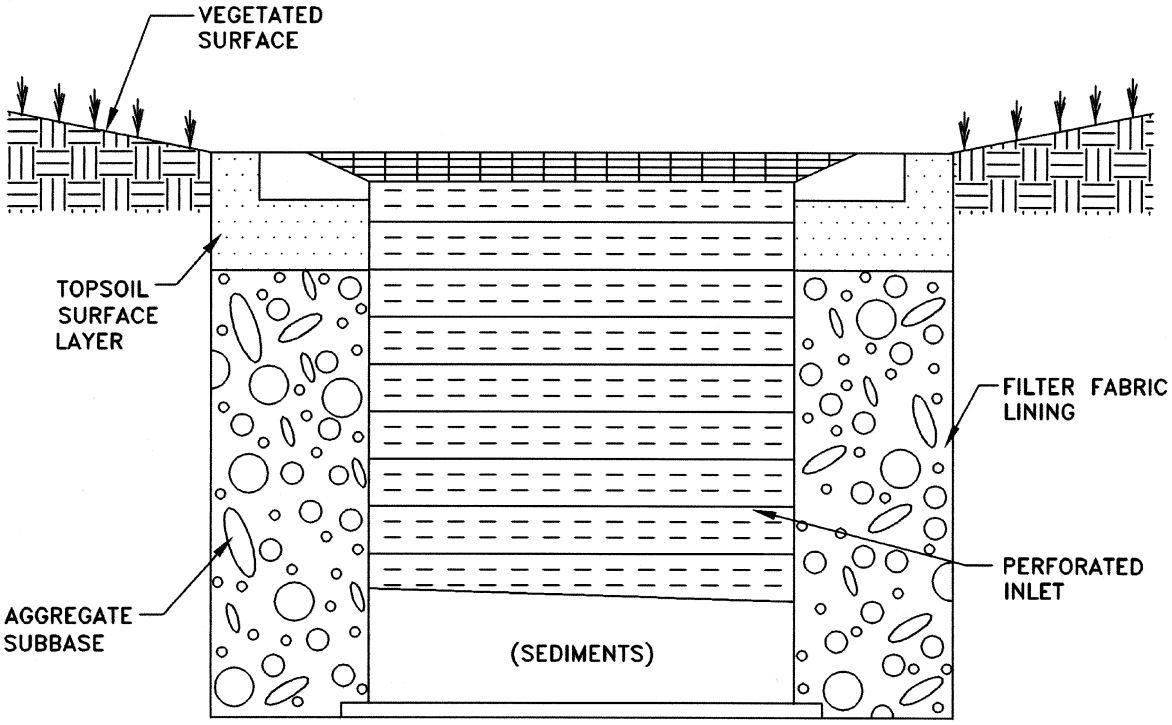

Figure 1–3–H

SCHEMATIC OF DRY WELL BMP

NO SCALE

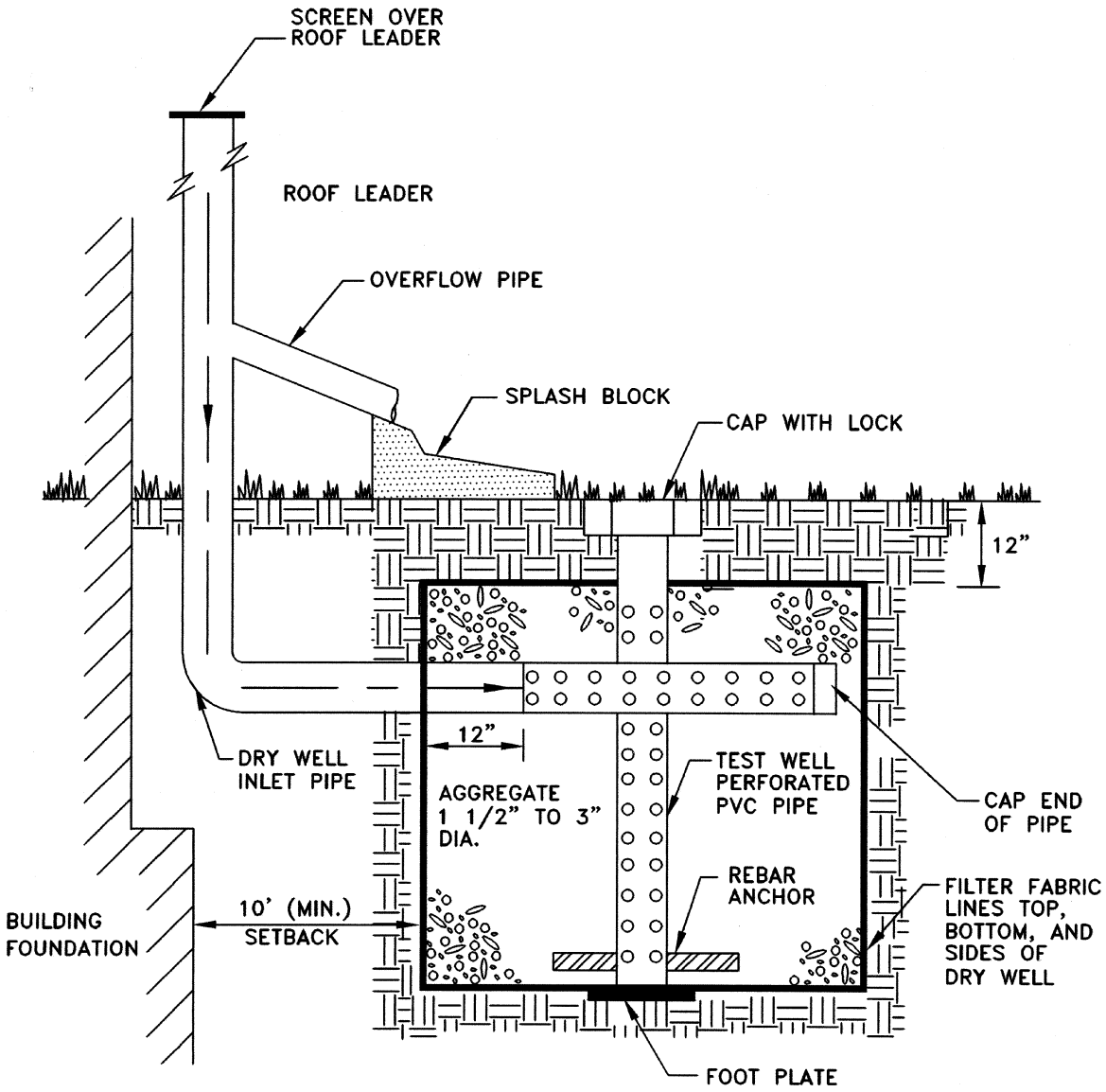

1.50.4 Planning Considerations:

a. Infiltration facilities are primarily used as water quality controls for small development projects. It may not be cost-effective to use infiltration devices to achieve required flooding/erosion control performance standards because the facility must be sized to capture all design storm runoff up to, and for some period after, the time of peak flow. Whereas detention basins can be designed to limit most of the peak-shaving storage to periods around the time of peak flow, peak-shaving designs of infiltration devices require the provision of a considerable amount of storage to handle the entire rising limb (and portions of the falling limb) of the design storm hydrograph.

b. The infiltration BMP must be sited to control at least 80 percent of the non-residential development site area. Multiple facilities are likely to be required on a development site to achieve 80 percent coverage. As outlined in Table 1-3-10, supplemental BMPs are required if the infiltration BMP facility cannot control 100 percent of the development area.

1.50.5 Design Criteria:

a. At a minimum, the trench or dry well shall be sized to store the water quality volume (0.5 inch of runoff per impervious acre in the facility drainage area) within the voids in the aggregate backfill material (assume voids ratio of 0.4).

b. The infiltration facility must be sized to completely dewater the water quality volume within 48 hours.

c. Stone aggregate backfill material for the trench shall have a maximum diameter of three inches and a minimum diameter of one and one-half inches.

d. Infiltration trenches and dry wells typically range from two to 10 feet deep. The maximum depth (d) of the infiltration BMP storage zone, should be based upon the following relationship:

$\mathbf{d = fT/V_r}$; where:

d = maximum depth of infiltration storage zone, in ft
f = infiltration rate of underlying soil, in ft/hr
T = maximum storage time = 48 hours
V_r = voids ratio = 0.4

NOTE: The infiltration BMP depth based on the storage time should be checked against the criteria for minimum distance (four feet) between the invert and water table or bedrock, and a smaller depth should be selected if necessary. In addition to the depth of the infiltration BMP storage zone, a dry well should be buried 12 inches below ground level.

e. The required total surface area (A) of the infiltration facility can be calculated as follows:

$\mathbf{A = S/dV_r}$; where:

A = infiltration BMP surface area, in ft^2
S = water quality volume, in ft^3
d = infiltration facility depth, in ft
V_r = voids ratio = 0.4

NOTE: For sites with multiple infiltration trenches or dry wells, the surface area should be calculated for the contributing drainage area of each facility.

f. An observation well of perforated PVC pipe four to six inches in diameter with a tamper-proof lockable cap shall be installed in every infiltration facility (see Figure 1-3-I).

g. A non-erosive overland flow path shall be provided for surface runoff that exceeds the capacity of each infiltration trench.

h. Filter fabric shall be placed along the top, bottom, and sides of the infiltration trench or dry well.

i. Stormwater management facilities must also be provided to control the post-development peak runoff from the stormwater management design storm(s) specified in Part Two. The peak runoff performance standard can be met by providing additional detention storage facilities.

j. Infiltration facilities tend to clog and require major cleanouts more frequently than other BMPs. In order to minimize the risk of premature clogging and eventual failure, construction methods as recommended by Maryland DNR (1984) shall be adhered to.

Figure 1–3–I

INFILTRATION TRENCH WITH OBSERVATION WELL DETAIL

(CROSS–SECTION)

NO SCALE

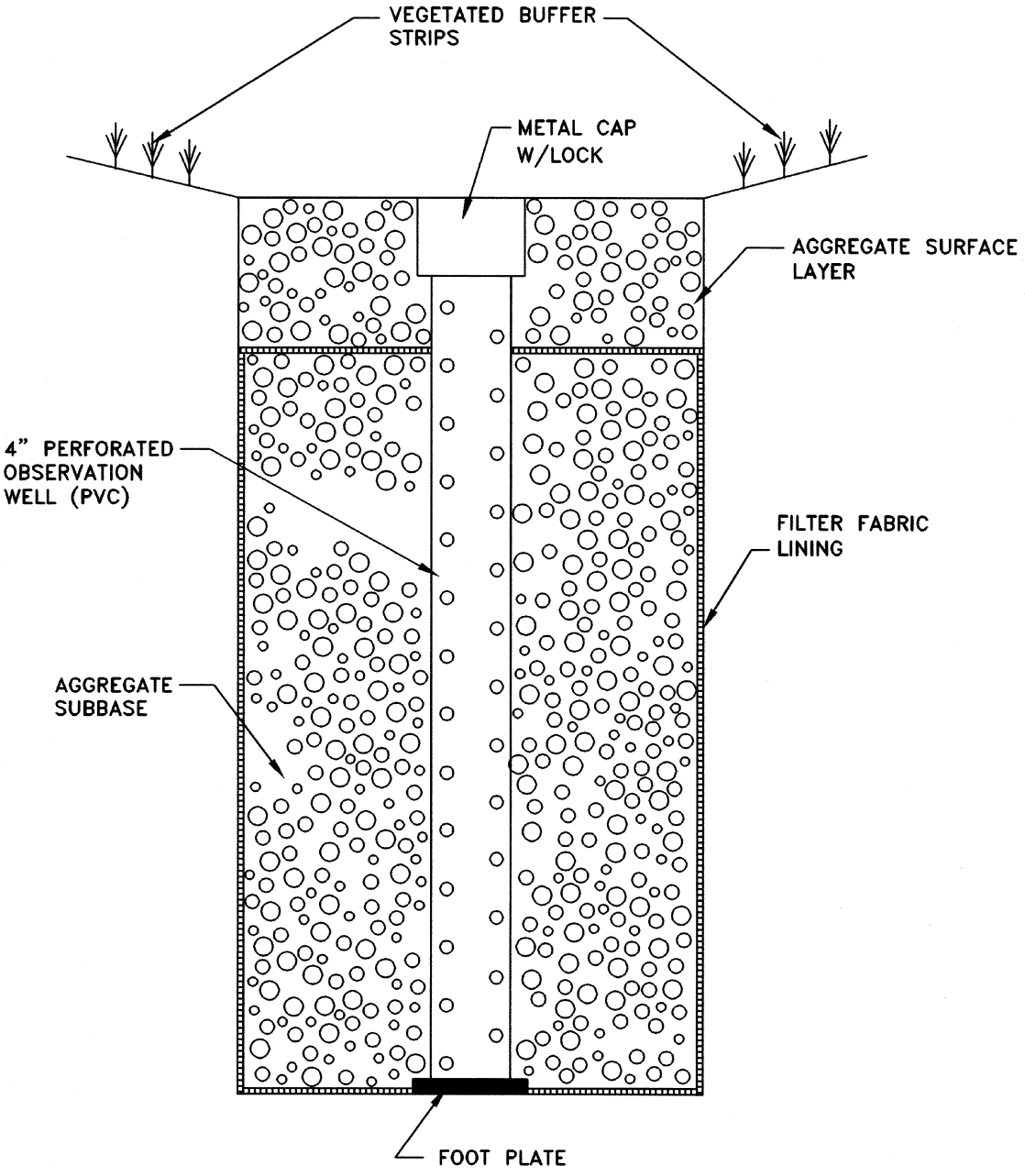

1.50.6 Maintenance:

a. Due to the high potential for clogging, infiltration BMPs are likely to require major cleanout activities more frequently than detention basin BMPs. For this reason, infiltration BMPs are only recommended for small non-residential sites where the owners can be held accountable for the required maintenance activities, which are identified in two categories as follows:.

b. **Routine Maintenance** includes debris removal, monitoring well inspections (at least once each quarter, preferably following a rainstorm), and record-keeping.

c. For infiltration trenches, the major **Non-Routine Maintenance** activity will be the elimination of clogging conditions by replacing the surface layer of aggregate and the filter fabric covering the top of the trench. The old aggregate should be removed and the filter fabric should be cut on either side of the trench and replaced with a new strip (minimum one foot of overlap between the old and new filter fabric). Clean aggregate should then be laid on top of the new filter fabric until flush with the capped observation well. Based on typical operating experiences in the Mid-Atlantic region, surface cleanout operations and filter fabric replacement may be required approximately every two years. The aggregate layers of the trench below the top layer of filter cloth are likely to exhibit clogging conditions from time-to-time. When this occurs, the entire trench should be rehabilitated, starting with excavation of all aggregate, removal of all filter cloth, and rescarification of the bottom and sides of the trench.

d. For dry wells, the major maintenance activity is the removal of vegetative litter and debris from the screens at the top of the roof leaders. If the dry well exhibits clogging problems, a complete rehabilitation (i.e., removal and replacement of filter fabric and aggregate) of the facility is likely to be required.

1.51 GRASSED SWALE WITH CHECK DAMS

1.51.1 Description. A grassed swale with check dams is a natural or graded depression with small dams (six to 12 inches in height) placed at specific intervals to create a series of temporary pools to induce infiltration. As the stormwater runoff overtops the check dams, it can be directed to flow through vegetated drainage

swales with gentle slopes. The gentle slopes with vegetative cover provide non-erosive flow velocities. The combination of low velocities and vegetative cover provides opportunities for infiltration and for sediments to settle out. A schematic of a grassed swale with check dams is provided in Figure 1-3-J and typical details are shown in Figures 1-3-K and 1-3-L.

1.51.2 Applicability:

a. Grassed swales with check dams are most applicable along highways or in residential development projects with low to moderate densities where the impervious cover is relatively small. Swales are usually located in a drainage easement at the side or back of residential lots or in highway median strips. These swales are intended for use with relatively small drainage areas. The maximum area served by individual swale systems typically should be less than about five acres, otherwise the swale will become excessively large in cross-section. Further, swale BMPs are likely to be most feasible in single-family residential areas that exhibit manageable peak flows for a reasonable swale cross-section. As indicated in Table 1-3-4, grassed swales with check dams are most appropriate for small residential development projects (less than five acres) with low to moderate levels of impervious cover. In Chesapeake Bay Management areas, grassed swales with check dams may be suitable for supplementing the following BMPs serving both small and large development projects with moderate to high levels of imperviousness: extended dry detention (51 to 55 percent imperviousness) and modified extended dry detention (71 to 100 percent imperviousness).

b. Vegetated swales shall not receive stormwater runoff until all contributing areas have been stabilized.

1.51.3 Planning Considerations:

a. Grassed swales with check dams are primarily used as BMPs and drainage conveyance systems for small drainage areas. It will typically not be feasible to use a grassed swale BMP to achieve flooding/erosion control performance standards because a prohibitively large cross-section would be required for peak-shaving detention storage.

Figure 1–3–J

GRASSED SWALE WITH CHECK DAMS (SCHEMATIC)

NO SCALE

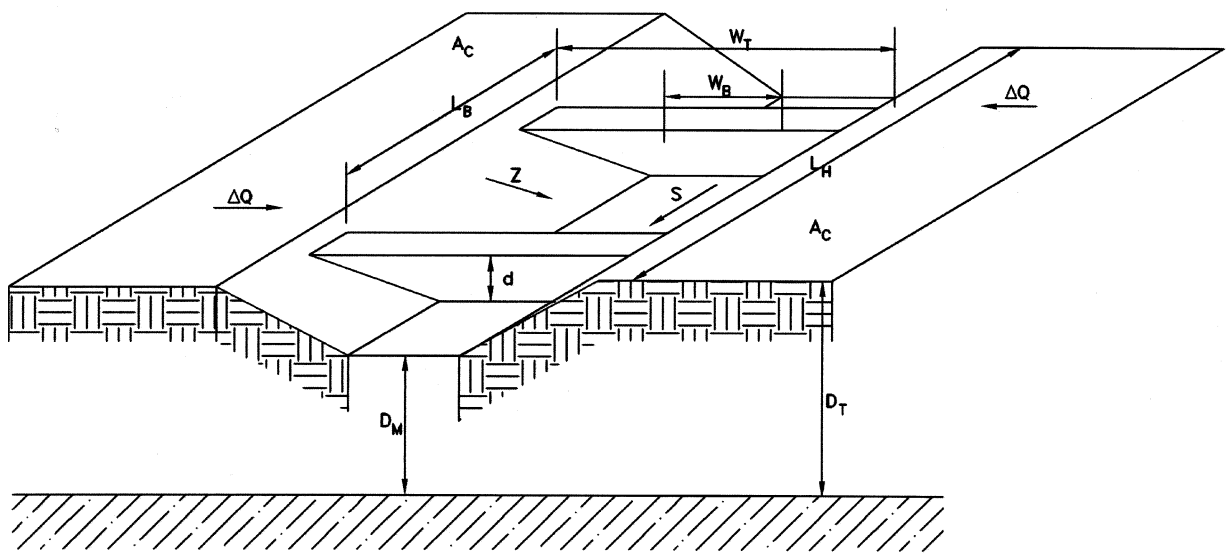

f = Infiltration Rate (In/Hr)

T_p = Maximum Allowable Ponding Time (Hrs)

D_T = Depth to Seasonal High Groundwater Table (Ft)

D_M = Min. Dist. from Swale bottom to Groundwater Table (Ft)

d_s = Depth of Swale (Ft)

W_B = Bottom Width of Check Dam (Ft)

Z = Side Slope Ratio (N:1)

S = Longitudinal Slope (%)

L_B = Length Behind Check Dams (Ft)

L_H = Total Hydraulic Length of Swale (Ft)

ΔQ = Increase in Runoff Depth (In)

A_C = Contributing Drainage Area (Sq Ft)

T = Swale Filling Time (Hrs)

P = Amount of Rainfall (In)

W_T = Top Width of Check Dam (Ft) = $W_B + 2\ d_S Z$

To Compute L_H if not known:

$$L_H = \frac{\frac{\Delta Q}{12} A_c}{\frac{d_s}{4}(W_T + W_B) + W\left(\frac{f}{12}T - \frac{P}{12}\right)}$$

$$L_B = \frac{d_s}{\frac{S}{100}} \qquad \#\ \text{Check Dams} = \frac{L_H}{L_B}$$

$$\text{Volume of Storage (Cu Ft)} = \frac{L_H}{L_B}$$

$$\text{Adjusted } L_B = \frac{L_H}{\#\ \text{Check Dams}}$$

Figure 1-3-K

GRASSED SWALE WITH CHECK DAMS (DETAIL)

NO SCALE

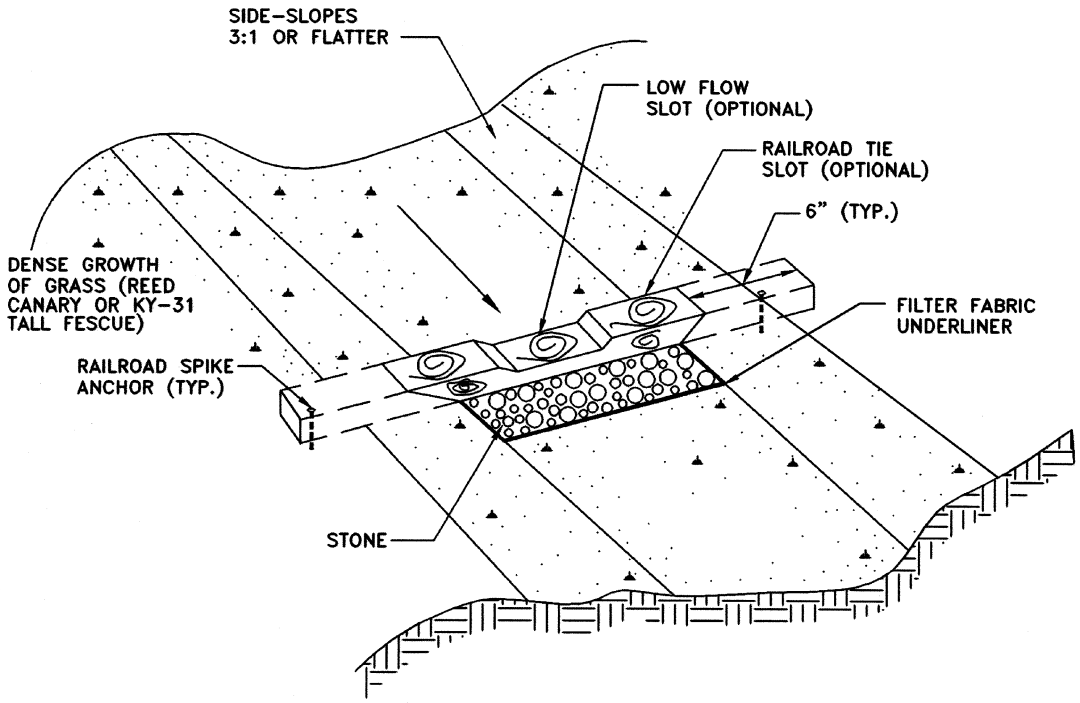

Figure 1–3–L

GRASSED SWALE WITH CHECK DAMS (VIEWS)

NO SCALE

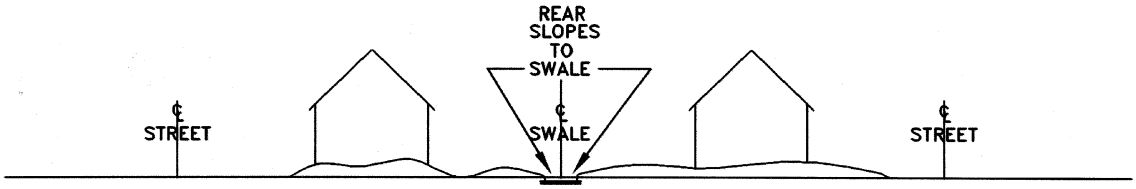

SIDE VIEW

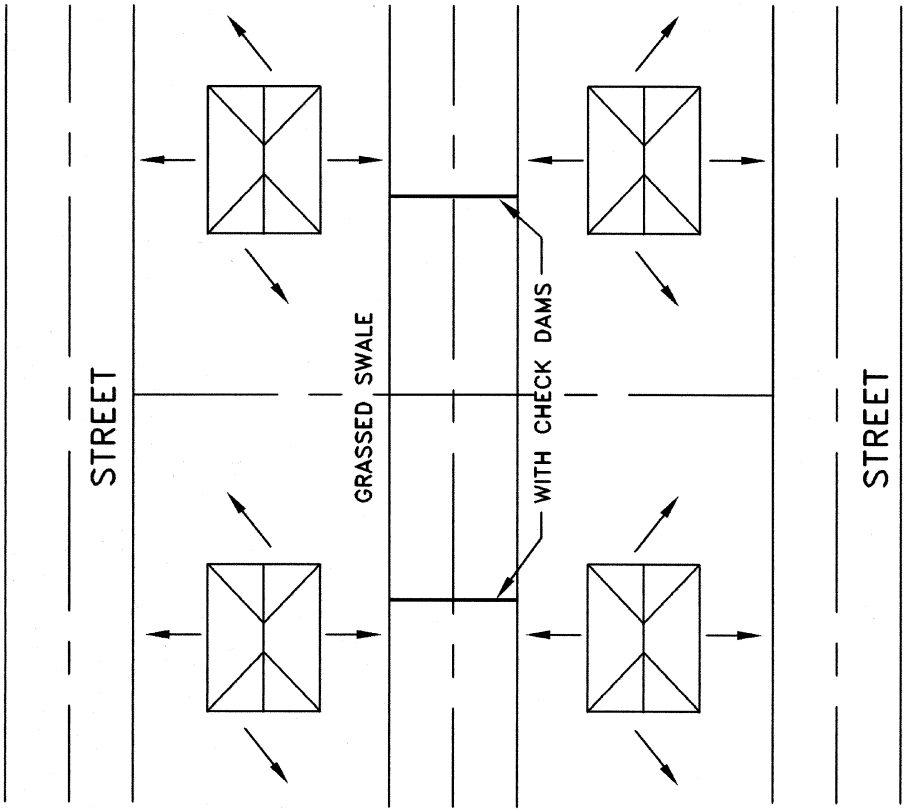

TOP VIEW

b. For the use of grassed swales with check dams, the permeability or final infiltration rate of the underlying soil should be equal to or greater than **0.27 inch per hour**. Those soil textural classes that have slow infiltration rates should not be considered for grassed swales. Thus, the suitable textural classes of the soil underlying the swale are sand, loamy sand, sandy loam, loam, and silt loam. The seasonal high groundwater table or bedrock should be at least one to two feet below the bottom of the grassed swale.

c. Grassed swales with check dams should not be constructed with longitudinal bottom slopes greater than five percent, a constraint that should not be a problem in the City. The minimum slope allowed is one percent.

d. If used as a primary BMP (residential development projects only), the grassed swale with check dam system must drain at least 80 percent of the development site area. The dedication of natural open space is required to offset a shortfall in BMP coverage if swale BMPs are the primary BMP. For every one percent shortfall in swale BMP coverage (up to a maximum of 20 percent), 0.3 percent of the project area must be dedicated as permanent natural open space.

1.51.4 <u>Design Criteria</u>:

a. Grassed swales with check dams can be designed to provide detention storage (upstream of the check dams) equivalent to the Awater quality volume@ specified in the State Stormwater Management Regulations (0.5 inch of runoff per impervious acre in the contributing drainage area).

b. The check dams that create the water quality storage pools in the grassed swale should be a minimum of six inches in height. The maximum depth of storage should be six to 12 inches, depending upon pedestrian and vehicular safety requirements.

c. The design ponding time for swales with check dams should be 30 hours for compliance with the technical criteria for detention systems in the State Stormwater Management Regulations. The storage behind the check dams can be dewatered by infiltration, evaporation, and/or providing a small weep hole in the check dam. It is advisable to dewater the swale within one to two days after the storm ends to minimize potential public safety hazards and mosquito problems.

d. If a large design storm (e.g., 10-year storm) is used to design the swale, the velocity of flow expected from the design storm should not exceed the permissible velocity for the type of vegetative lining used for the swale. Table 1-3-13 lists the permissible velocities for various types of vegetative cover.

e. The side slopes of the vegetated swale typically should be no steeper than 3:1 and no steeper than 2:1 for swales lined with riprap.

f. Swales can be trapezoidal, parabolic, or V-shaped. The trapezoidal swale shape is preferred due to its ease of construction. It is noted that, with time, trapezoidal shapes tend to become parabolic due to the growth of vegetation and the settlement of solids.

g. The check dams must be permanent and made of non-erodible materials. The overflow must occur over the non-erodible material and not be allowed to scour around the area where the check dam meets the swale side slopes. Downstream scour must also be prevented.

1.51.5 Maintenance:

a. Swale maintenance requirements are very minor if the swale is properly installed. An inspection of the site, performed once each year approximately 48 hours after a major storm event, is recommended to ensure that the swale is functioning properly. Swale maintenance consists mainly of keeping the vegetative cover dense and vigorous but also involves periodic mowing and reseeding of bare spots. Mowing of the swale too close to the ground (scalping) should be avoided. Vegetative cover should be maintained at a minimum height of three inches.

b. Sediment deposits behind the check dams should be periodically removed. Water ponded in a swale more than 48 hours after a major storm indicates that natural recharge rates have been reduced by compaction and/or accumulated sediment and debris, which means that maintenance should be performed. Sediment removal can be performed by hand with a rake, shovel, and wheelbarrow. It is recommended that these sediment cleanout activities be undertaken at least once per year, preferably coinciding with other routine maintenance activities.

Table 1-3-13

PERMISSIBLE VELOCITIES FOR VARIOUS GROUND COVERS

NO.	COVER	SLOPE RANGE PERCENT (%)	PERMISSIBLE VELOCITY	
			EROSION RESISTANT SOIL	EASILY ERODED SOILS
1	Bermuda Grass (Bynodon Dactylon)	0-5	8	6
2	Kentucky 31 Tall Fescue (Festuca Arundinacea)	0-5	7	5
3	Grass-Legume Mixture	0-5	4	3
4	Red Fescue Redtop (Agrostis Alba) Lespedeza Servicea Alfalfa	0-5	3.5	2.5
5	* Annuals Common Lespedeza Sudan Grass Small Grain Ryegrass	0-5	3	2
6	Rock Riprap Section (for temporary construction)	5-10	8	6.5

* Annuals are used on mild slopes (less than three percent) or as temporary protection until permanent covers are established. Use on slopes steeper than five percent is not recommended.

SOURCE: State of Maryland Standards and Specifications for Soil Erosion and Sediment Control, 1993.

1.52 BIOFILTRATION SWALE

1.52.1 Description. A biofiltration swale treats stormwater runoff by direct contact with the soil and vegetation. The stormwater runoff can also be ponded in an area containing emergent wetland plants, but this approach can result in maintenance problems (e.g., citizen complaints about mosquitos). Pollutants, such as sediments, nutrients and metals, can be reduced by biological uptake and infiltration through the soil. By providing sufficient residence time for the stormwater runoff, pollutant removal and infiltration can be accomplished. A schematic of a biofiltration swale is shown in Figure 1-3-M.

1.52.2 Applicability:

a. A biofiltration swale in its many forms is used as a BMP for removing pollutants from stormwater runoff. It can be used in residential areas and adjacent to highways. Due to the greater maintenance requirements, the use of biofiltration in wetlands areas should probably be restricted to small systems that can be privately maintained by adjoining homeowners.

b. Biofiltration swales are intended for use with relatively small drainage areas. The maximum area served by individual swale systems typically should be less than about five acres, otherwise the swale will become excessively large in cross-section. Further, swale BMPs are likely to be most feasible in single-family residential areas that exhibit manageable peak flows for a reasonable swale cross-section.

c. As indicated in Table 1-3-4, biofiltration swales are most appropriate for small residential development projects (less than five acres) with low to moderate levels of impervious cover. In Chesapeake Bay Management areas, biofiltration swales may be suitable for supplementing the following BMPs serving both small and large development projects with moderate to high levels of imperviousness: extended dry detention (51 to 55 percent imperviousness) and modified extended dry detention (71 to 100 percent imperviousness).

Figure 1-3-M

BIOFILTRATION SCHEMATIC

NO SCALE

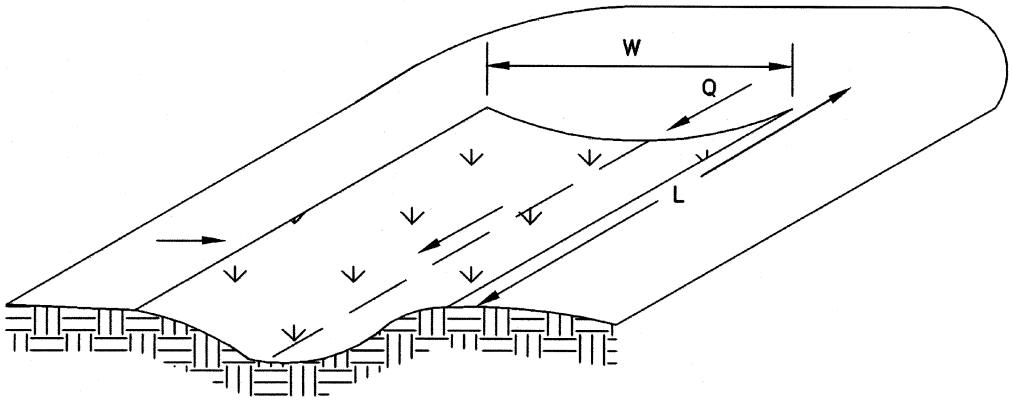

SECTION A-A

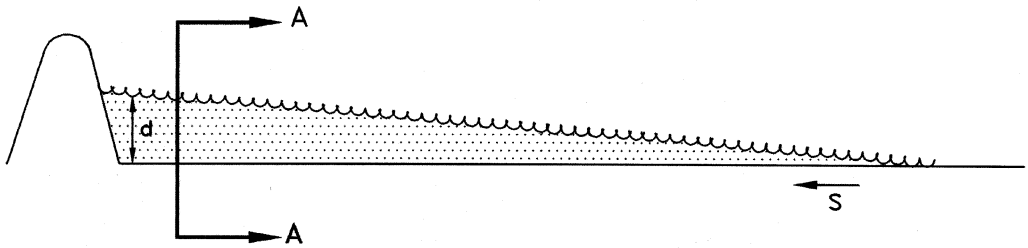

SIDE VIEW

1.52.3 <u>Planning Considerations</u>:

a. Biofiltration swales are primarily used as BMPs and drainage conveyance systems for small drainage areas. It will typically not be feasible to use a grassed swale BMP to achieve flooding/erosion control performance standards because a prohibitively large cross-section would be required for peak-shaving detention storage.

b. A biofiltration swale is recommended for soils having infiltration rates ranging from 1.02 inches per hour to 0.27 inch per hour. This range of infiltration rates is associated with the following soil textural groups: sandy loam and silt loam.

c. The seasonal high groundwater table should be at least one to two feet below the ground surface. A groundwater table high enough to provide moisture to vegetation during the dry season but not high enough to create long periods of saturation is ideal. In areas with high saturation, emergent wetland plants can be planted.

d. If used as a primary BMP (residential development projects only), the biofiltration swale system must drain at least 80 percent of the development site area. The dedication of natural open space is required to offset a shortfall in BMP coverage if swale BMPs are the primary BMP. For every one percent shortfall in a swale BMP coverage (up to a maximum of 20 percent), 0.3 percent of the project area must be dedicated as permanent natural open space.

1.52.4 <u>Design Criteria</u>:

a. A biofiltration swale should have a hydraulic length of at least 200 feet. If the length is less than 200 feet, the width needs to be increased to provide the equivalent hydraulic residence times (nine minutes). Sufficient residence time is needed to allow sediments to be removed through the mechanism of settling and to maximize contact with the soil/vegetation surface.

b. Side slopes should be as flat as possible and no steeper than 3:1.

c. Longitudinal slopes should ideally be in the range of two to four percent, which may be difficult to achieve in many areas of the City. Slopes less than two percent can be used with underdrains to avoid persistent pooling of runoff.

d. Suitable vegetation should be selected for the swale. The type of vegetation selected depends on the type of underlying soil. Emergent wetlands can also be used in the bottom portion of the channel. Maintenance requirements should also be considered in selecting the type of vegetation.

e. A parabolic cross-section is preferred for biofiltration swales. Initially, the swale channel can be constructed as a trapezoid. With time, trapezoidal shapes tend to become parabolic due to sedimentation and the growth of vegetation.

f. Depth of Flow:

(1) The design depth of flow should be at least two inches less than the expected winter vegetation height.

(2) An earthen berm protected by stone can be installed at the end of the biofilter to ensure shallow ponding of the stormwater runoff in the biofiltration swale. The height of the berm should be the design depth of flow and freeboard. Stone protection of the berm should prevent erosion under overflow conditions. Provisions for dewatering the swale following a rain storm can also be made by providing a notch in the berm.

g. Based on the slope parameters of the biofilter selected, the velocity of stormwater runoff within the swale should not exceed 0.9 foot per second. Maintaining relatively low velocities will assist with the removal of suspended solids through sedimentation.

h. The Manning's "n" values given in Table 1-3-14 are recommended for the design of biofiltration swales.

i. Swale BMPs should be planned and designed to fit into the surrounding vegetation and development. A well-designed biofiltration swale should look like the surrounding natural vegetation.

1.52.5 Maintenance:

a. Maintenance requirements of biofilters in grassed swales are minimal, except for mowing and removal of sediments. Once the vegetation has been established, mowing should be performed on an as-needed basis and the grass clippings should not be allowed to decay in the biofiltration facility. Sediments should be removed whenever the volume of the facility is determined to be

inadequate and ponding occurs for an extended period following a rain storm. A swale that exhibits continuous ponding following a rainstorm may require mosquito control.

b. Proper inspection should be performed during the construction of the biofiltration swale. It should be inspected regularly during the period when vegetation is being established. After the vegetation has been established, an annual inspection should be sufficient.

1.53 REDUCTION OF BUFFER ZONE

1.53.1 Chesapeake Bay Management Areas. The City Chesapeake Bay Preservation Ordinance requires that a 100-foot wide vegetated buffer be preserved in Resource Protection Areas (RPAs) adjacent to and landward of tidal wetlands, tidal shores, non-tidal wetlands connected by surface flow and contiguous to tidal wetlands or tributary streams, and perennial tributary streams. However, the buffer length may be reduced under certain conditions as approved by the Director on a case-by-case basis in accordance with the following:

a. The buffer may be reduced to a minimum of 50 feet in cases where supplemental BMPs are employed to achieve equivalent water quality protection. Table 1-3-15 summarizes required supplemental BMP efficiencies in 10-foot increments. Eefficiencies listed in the table apply only to the site area drained by the reduced buffer. To calculate the required supplemental BMP efficiency based on the total site area, the relevant efficiency value shown in the table is to be multiplied by the percentage of the total buffer zone drainage area that is served by the reduced buffer. Applicants are referred to CBLAD Information Bulletins No. 3 (March 1991) and No. 10 (November 1992) for further guidance on permissible buffer area modifications.

b. When the buffer requirement would result in the loss of a buildable area on a lot or parcel recorded prior to October 1, 1989, the Director, after consultation with the Department of Planning and Development, may modify the width of the buffer area in accordance with the plan of development and the following criteria:

(1) Modification to the buffer shall be limited to the minimum necessary to achieve a reasonable buildable area for a principle structure and necessary utilities.

Table 1-3-14

MANNING'S ROUGHNESS COEFFICIENT ("n" VALUE) FOR VEGETATION

HEIGHT OF VEGETATION	"n" VALUE
Dense grass up to six inches tall	0.07
Dense grass from six to 12 inches tall	0.10
Dense grass more than 12 inches tall	0.20
Wetland Plants	0.07

NOTE: Refer also to Chapter 5 in the *Virginia Erosion and Sediment Control Handbook.*

Table 1-3-15

SUPPLEMENTAL BMP EFFICIENCY (TOTAL P REMOVAL) REQUIRED FOR DIFFERENT BUFFER ZONE LENGTHS IN CHESAPEAKE BAY RESOURCE PROTECTION AREAS (RPAs)

BUFFER LENGTH (IN FEET)	* SUPPLEMENTAL BMP EFFICIENCY (IN PERCENT)
≥ 100	0
90	3
80	5
70	8
60	10
50	15

* To calculate required BMP efficiency, multiply this value by the percentage of the total buffer zone drainage area that is served by the reduced buffer.

NOTE: Supplemental BMP efficiency is specified in CBLAD Information Bulletin No. 3, March 1991.

(2) Where possible, an area that is equivalent to the area encroaching the buffer shall be established elsewhere on the lot or parcel in a way to maximize water quality protection.

1.53.2 <u>Reservoir Protection Districts</u>. The City Reservoir Protection Ordinance requires that new development in water supply watersheds preserve a 200-foot buffer from the center of any perennial stream or the edge of a reservoir and a 100-foot buffer from the center of any intermittent streem. However, the ordinance allows for reduction of the buffer to a minimum width of 50 feet from the edge of a stream or reservoir under certain conditions and if specifically requested in writing. Applications will be reviewed by the Director on a case-by-case basis to determine whether or not any reduction will be allowed based on the following:

a. The buffer width will not be reduced in areas where the slope is 15 percent or greater as determined by the Department of Engineering.

b. Where the slope is less than 15 percent, the following shall apply:

(1) No buffer is required around a wet detention basin except for maintenance easements. In areas where a perennial or intermittent stream is upstream of a wet detention basin that is of adequate design to receive and treat runoff from the development site, the buffer will be reduced to 50 feet.

(2) In areas where runoff is diverted to an adequate BMP for treatment before it reaches a stream or reservoir, the buffer may be reduced as appropriate to the site but to not less than 50 feet.

(3) In cases where the Director determines that a hardship exists, the buffer may be reduced to 25 feet. As addressed in the ordinance, a hardship could exist if the property owner is unable to construct a dwelling or approved structure on his property after the allowable buffer reductions have been granted in accordance with other remedies explained in this subsection.

(Sections 1-54 through 1-99 are reserved. Section 2.0 is next.)

CHAPTER 2
SEWAGE COLLECTION SYSTEMS

2.0 GENERAL **2-1**
2.0.1 System Design 2-1
2.0.2 Design Period 2-1
2.0.3 Capacity Factors 2-2
2.0.4 Design Criteria 2-2
2.1 GRAVITY SEWERS **2-4**
2.1.1 Minimum Size 2-4
2.1.2 Depth 2-4
2.1.3 Slope 2-5
2.1.4 Alignment 2-5
2.1.5 Increasing Pipe Size 2-5
2.1.6 High Velocity Protection 2-5
2.1.7 Building Sewer Lines and Connections 2-5
2.1.8 Materials, Joints, Construction, Bedding, Testing, Etc. 2-5
2.1.9 Boring and Jacking 2-7
2.1.10 HRSD Gravity Sewer Interceptor 2-7
2.2 FORCE MAINS **2-7**
2.2.1 Minimum Size 2-7
2.2.2 Velocity 2-7
2.2.3 Air Relief Valve 2-7
2.2.4 Blow-Off Valve 2-7
2.2.5 Termination 2-7
2.2.6 Anchorage 2-8
2.2.7 Materials, Joints, Construction, Bedding, Testing, Etc. 2-8
2.2.8 Boring and Jacking 2-8
2.2.9 HRSD Force Main Interceptor 2-8
2.2.10 Emergency Pump Connection 2-8
2.3 MANHOLES **2-8**
2.3.1 Location 2-8
2.3.2 Manhole Drop 2-8
2.4 SEWER LAYOUT AT STREAMS, ESTUARIES, LAKES AND RESERVOIRS **2-9**
2.5 PROTECTION OF WATER SUPPLIES **2-9**
2.5.1 Water Supply Interconnection 2-9
2.5.2 Relation to Waterworks Structures 2-9
2.6 (RESERVED) **2-10**
2.7 DESIGN DOCUMENTS **2-10**
2.7.1 Title and General Layout Sheets 2-10
2.7.2 Plan, Profile and Detail Sheets 2-11
2.8 DESIGN STANDARD PLATES **2-12**
2.9-2.99(Reserved)

List of Illustrations for Chapter 2

TABLES

2-1 Design Flows for New Sewage Works 2-3
2-2 Minimum Slope 2-6

FIGURES

None

PLATES

4201 House Lateral 2-14
4202 Ductile Iron House Lateral for Deep Sewer Main 2-15
4203 Force Main Connection to Gravity Sewer 2-16
4204 Cast Iron Cleanout Box 2-17
4205 Steel Casing Installation (General) 2-18
4206 Steel Casing Installation (Gravity Sewer) 2-19
4207 Air Relief Valve 2-20
4208 Blow-Off 2-21
4209 Force Main Connection to Manhole 2-22
4210 Force Main Bend Anchorage 2-23
4211 Force Main Tee and Dead-End Anchorage 2-24
4212 Bedding for Pipe 2-25
4213 Steel Casing Installation (Force Main) 2-26
4214 Force Main Connection to HRSD 2-27
4215 Emergency Pump Connection 2-28
4216 Precast Manhole Cross-section 2-29
4216A 60” Precast Manhole Cross-section..... 2-29.1
4217 Manhole Invert Shaping 2-30
4218 Precast Manhole with Monolithic Extended Drop 2-31
4219 Shallow Precast Manhole 2-32
4220 Inlet and Outlet Pipes 2-33
4221 Manhole Steps 2-34
4222 Manhole Frame & Cover (Non-Watertight) 2-35
4223 Manhole Frame & Cover (Watertight w/Lock Bar) 2-36
4224 Manhole Frame & Cover (Watertight w/Gasket) 2-37
4225 Brick Manhole Cross-section 2-38
4226 Shallow Brick Manhole 2-39
4227 External Drop Connection 2-40
4228 Pile Bent Support under Pipe 2-41

Chapter 2

SEWAGE COLLECTION SYSTEMS

2.0 GENERAL

2.0.1 System Design:

a. Design of all sewage collection systems to be constructed in the City of Newport News shall be in accordance with this manual and with sewerage regulations set forth by the Virginia State Water Control Board and the Virginia State Health Department. The criteria established herein represent minimum acceptable standards of design for typical conditions. The designer must determine if exceptional site conditions exist, and the design shall include the use of materials and methods over and above those specified herein to address any exceptional conditions.

b. Sewage collection systems shall be designed and constructed to achieve total containment. Combined sewers (stormwater runoff and sanitary sewage together) are prohibited. Overflows from intercepting or connecting sewers shall not be permitted. The connection of roof drains and/or basement drains to sanitary sewer systems is also prohibited.

2.0.2 Design Period. Sewage collection systems shall be designed for ultimate tributary population with an upper limit consisting of the 50-year population growth projection, except when considering parts of the systems that can be readily increased in capacity. Consideration shall be given to land use plans and to

other planning documents, as well as to the maximum anticipated capacity of institutions, industrial parks, apartment developments, existing systems, pump stations, force mains, etc.

2.0.3 Capacity Factors. In determining the required capacities of sewage collection systems, the following factors shall be considered:

a. Maximum peak sewage flow in gallons per minute (G.P.M.).

b. Maximum sewage or waste flows from industrial plants.

c. Ground water infiltration.

d. Topography of the area.

e. Location of the waste treatment plant.

f. Depth of excavation.

g. Pumping requirements.

h. Ultimate service area.

i. Other factors as appropriate.

2.0.4 Design Criteria. Minimum design criteria are set forth below:

a. New sewage collection systems shall be designed on the basis of an average design flow (ADF) of sewage in gallons/day (G.P.D.) of not less than that calculated from the information contained in Table 2-1.

b. Minimum peak design flow (PDF) for lateral and sub-main lines shall be four times the ADF. Minimum PDF for main, trunk and interceptor sewer lines shall be two and one-half times the ADF. When calculating PDF, the product shall be expressed in gallons/minute (G.P.M.) in both cases.

Table 2-1

DESIGN FLOWS FOR NEW SEWAGE WORKS

DISCHARGE FACILITY *	(A) DESIGN UNITS	(B) FLOW G.P.D./UNIT	(C) FLOW DURATION HOUR
Dwelling: Single-Family (4 persons/dwelling)	per dwelling	400	24
Multi-family (3 persons/dwelling)	per dwelling	300	24
School: With showers and cafeteria	per person	16	8
Without showers and cafeteria	per person	10	8
Boarding School	per person	75	16
Motel (65 gallons/person) (rooms only)	per room	130	24
Trailer Court (3 persons/trailer)	per trailer	300	24
Restaurant	per seat	50	16
Interstate or Through-Highway Restaurant	per seat	180	16
Interstate Rest Area	per person	5	24
Service Station	per vehicle serviced	10	16
Factory	per person/8-hour shift	15-35	operating period
Shopping Center and Office Building	per 1000 ft' of ultimate floor space	200-300	12
Hospital	per bed	300	24
Nursing Home	per bed	200	24
Home for the Aged	per bed	100	24
Doctor's Office in Medical Center	per 1000 ft'	500	12
Laundromat (9 to 12 washing machines)	per machine	500	16
Community College	per student and faculty member	15	12
Swimming Pool	per swimmer	10	12
Theater: Drive-in Type	per car	5	4
Auditorium Type	per seat	5	12
Picnic Area	per person	5	12
Camp (Day and Night):			
Resort Type with limited plumbing	per camp site	50	24
Luxury Type with flush toilets	per camp site	100	24

* Colleges, universities and boarding institutions of special nature to be determined in accordance with Section 23.03.02c.2, Commonwealth of Virginia Sewerage Regulations.

As an example -- to calculate the ADF and PDF for a 25-lot single-family subdivision:

•**Multiply** number of lots (from the example) **times** number of Design Units (from column A) **times** Per Capita Flow (from column B) **to obtain** the ADF in G.P.D.; then

•**Divide** G.P.D. by 1440 (which is 24 hours from column C **times** 60 minutes/hour) **to obtain** the G.P.M.; then

•**Multiply** G.P.M. by 2.5 **to obtain** minimum PDF for main, trunk or interceptor sewer lines.

25 lots * 1 dwelling * 400 G.P.D. = 10,000 G.P.D (ADF) (then)

10,000 G.P.D. ÷ 1440 minutes = 6.94444 G.P.M. (then)

6.94444 G.P.M. * 2.5 = 17.36 G.P.M. (PDF)

2.1 GRAVITY SEWERS

2.1.1 Minimum Size:

a. Eight-inch pipe is the minimum for trunk, interceptor, main and sub-main lines, except that six-inch pipe may be used for sub-mains (cul-de-sac or sidewalk collector lines) serving or proposed to serve six connections or less provided that such line size is supported by engineering calculations.

b. Four-inch pipe with a cleanout box (refer to Plates 4201 through 4204) is the minimum for house laterals.

2.1.2 Depth. Sewer lines shall be placed deep enough to receive sewage from basement elevations and to prevent freezing. All sewer lines with less than three feet of cover or more than 10 feet of cover shall be constructed of ductile iron pipe of the type specified in the sewage collection system section of the Newport News *Standard Specifications.*

2.1.3 Slope:

a. All gravity sewage collection systems shall be designed and constructed to achieve self-cleaning velocities when flowing full of not less than two feet per second (based on Manning's formula and using an "n" value of 0.013). Table 2-2 shows minimum slopes to be provided, however slopes greater than these are desirable whenever possible and may be required by the Director if deemed necessary in any specific application.

b. All sewage collection systems to be installed that are designed at the minimum sanitary sewer slope as specified by the Virginia Health Department shall not be constructed less than the minimum allowable. Tolerance to allow a lesser slope than the specified minimum shall not be accepted. As-built plans of all sewage collection systems to be accepted into the public sewage collection system shall be provided prior to final acceptance. Any sewer lines found to be less than the minimum specified grade shall be reinstalled as required by the Director.

2.1.4 Alignment. All gravity sewer lines shall be laid with straight alignment between manholes. Horizontal alignment shall generally follow the centerline of the road. Installation of sewer lines under curb and gutter will be avoided wherever possible.

2.1.5 Increasing Pipe Size. Manholes are required where a smaller sewer line joins a larger one, and the invert of the larger line shall be lowered sufficiently to maintain the same energy gradient. The minimum drop through a manhole shall be as outlined in this chapter.

2.1.6 High Velocity Protection. Where velocities greater than 15 feet per second are expected, design shall be in accordance with Virginia sewerage regulations.

2.1.7 Building Sewer Lines and Connections. Building sewer lines shall be constructed in accordance with the Uniform Statewide Building Code of Virginia.

2.1.8 Materials, Joints. Construction, Bedding, Testing, Etc. Refer to the sewage collection system section of the Newport News *Standard Specifications.*

Table 2-2

MINIMUM SLOPE

Sewer Size (in inches)	Minimum Slope (in feet *per 100 feet (%)*)
8	0.40
10	0.28
12	0.22
14	0.17
15	0.15
16	0.14
18	0.12
21	0.10
24	0.08
27	0.067
30	0.058
36	0.046

2.1.9 Boring and Jacking. Installation shall be in conformance with Plates 4205 and 4206 for gravity sewer line crossings that require a steel casing. Minimum grade for steel casings and carrier pipe shall be twice that of the minimum required for sewer line installations. A description of the soil profile at the jacking pit shall be required.

2.1.10 HRSD Gravity Sewer Interceptor. Connection of a gravity sewer line to an HRSD gravity sewer interceptor shall be in accordance with HRSD connection standards and approved by HRSD prior to connection.

2.2 FORCE MAINS

2.2.1 Minimum Size. Force mains shall not be less than four inches in diameter, except for those mains that are served by grinder pumps.

2.2.2 Velocity. At pumping capacity, a minimum self-scouring velocity of two feet per second shall be maintained. A velocity of eight feet per second shall not be exceeded.

2.2.3 Air Relief Valve. An air relief valve shall be placed at the high points in the force main to relieve air locking (refer to Plate 4207).

2.2.4 Blow-Off Valve. A blow-off valve shall be provided at the low points in the force main as required by the Director to relieve settleable solids (refer to Plate 4208).

2.2.5 Termination:

a. The force main shall enter the receiving manhole with its centerline horizontal and with an invert elevation that will ensure a smooth flow transition to the gravity sewage collection system. In no case shall the force main enter the gravity sewer system at a point more than one foot above the flow line of the receiving manhole. The design shall minimize turbulence at this point (refer to Plate 4209).

b. The interior of receiving manholes shall be coated with a sealer to prevent deterioration as a result of hydrogen sulfide or other gases common to sewage systems. Coating shall be as approved by the Director.

2.2.6 Anchorage. A force main shall be sufficiently anchored throughout its entire length and within the pump station. The number of bends shall be as few as possible. Thrust blocks (refer to Plates 4210 and 4211), restrained joints and/or tie rods shall be provided where restraint is needed.

2.2.7 Materials, Joints, Construction, Bedding, Testing, Etc. Refer to Plate 4212 and the sewage collection system section of the Newport News *Standard Specifications.*

2.2.8 Boring and Jacking. Construction of force main crossings that require the installation of a steel casing shall be in conformance with Plates 4205 and 4213. A description of the soil profile at the jacking pit shall be provided.

2.2.9 HRSD Force Main Interceptor. Connection to an HRSD force main interceptor shall be in accordance with Plate 4214.

2.2.10 Emergency Pump Connection. An emergency by-pass shall be required (see Plate 4215).

2.3 MANHOLES

2.3.1 Location. Manholes shall be installed at the end of each line, at all intersections, and at all changes in grade, size or alignment, but in no case shall manholes be installed greater than 300 feet apart. Refer to Plates 4216 through 4227.

2.3.2 Manhole Drop. Sufficient drop shall be maintained through manholes to ensure that energy gradients are maintained. Minimum drop through a manhole shall be provided, as appropriate, according to the following (refer to Plate 4220):

a. A minimum 0.05 foot difference in invert elevations when inlet and outlet pipes are of equal diameters.

b. Match interior crowns of both pipes and provide slope as necessary from bottom of inlet pipe to bottom of outlet pipe when inlet and outlet pipes are of different diameters.

2.4 SEWER LAYOUT AT STREAMS, ESTUARIES, LAKES AND RESERVOIRS

The tops of all sewer lines entering or crossing streams shall be at a sufficient depth below the natural bottom of the stream bed to protect the line. In paved channels, the top of the sewer line shall be placed below the bottom of the channel pavement. Sewer lines shall be designed and installed to remain fully operational during 25-Year flood/wave action. Sewer lines placed along streams shall be located outside of the stream bed wherever possible. Sewer lines entering or crossing streams shall be constructed of ductile iron pipe. The pipe and joints shall be tested in place and shall exhibit zero infiltration. The same shall be designed, constructed and protected against erosion, anticipated hydraulic pressures and longitudinal, vertical and horizontal loads. Sewer lines laid on piers across ravines or streams shall be allowed only when it can be demonstrated that no other practical alternative exists (refer to Plate 4228). Such sewer lines on piers shall be constructed in accordance with the requirements for sewer lines entering or crossing under streams. Construction methods and materials of construction shall be such that sewer lines remain watertight and free from change in alignment or grade.

2.5 PROTECTION OF WATER SUPPLIES

2.5.1 Water Supply Interconnection. There shall be no physical connection between a drinking water supply and a sanitary sewer line, or between appurtenances thereto.

2.5.2 Relation to Waterworks Structures. No general statement can be made to cover all conditions; however, for public wells or other public water supply sources and structures and for all other potable water supply wells or other water supply sources and structures, sewage collection systems constructed or proposed to be constructed within the City shall meet the requirements of waterworks regulations, specifications and criteria published by the State of Virginia and by the Newport News Department of Public Utilities (Waterworks) with respect to minimum distances from water supply wells or other water supply sources and structures. No sanitary sewer line shall pass within 50 feet of a potable water supply well or other potable water supply source or structure unless special construction and/or pipe materials are used

to obtain adequate protection. The designer is referred to the current editions of waterworks regulations, specifications and criteria previously mentioned and to the *Rules and Regulations of the Board of Health, Commonwealth of Virginia, Governing the Disposal of Sewage* as basic design references. The design shall identify and adequately address the protection of all potable water supply structures within 100 feet of the proposed project.

2.6 (Reserved.)

2.7 DESIGN DOCUMENTS

2.7.1 Title and General Layout Sheets. The following information shall be provided on plans submitted to the Director for review:

a. The proper designation of the project, including nature of the project and identifying name or title.

b. Index of sheets included in the plans.

c. A vicinity map adequately showing the project location in relation to major streets.

d. The project control benchmark, which shall be an established City benchmark, identified as to location and elevation. Assumed data shall not be used.

e. Name, address and telephone number of consulting engineer and owner.

g. A legend of the symbols used on all sheets.

h. North arrow and scale.

i. Layouts shall include subdivision names, block and lot designations (or proposed block and lot designations), and all street names.

j. Locations of all existing sewer lines, properly designated, within or adjacent to the project area.

k. A connection point or points to existing facilities and tied to a known point on an existing facility (manhole, pump station, etc.).

l. Boundary line of project area.

m. Location of all proposed sanitary sewer lines.

n. The name and telephone number of the owner of each utility that is located within the project area.

o. If more than one sheet is used, a match line showing an overlap of each drawing shall be provided.

2.7.2 Plan. Profile and Detail Sheets. Information shown in the following subsections shall be provided:

a. The plan shall show the location of existing and proposed sewer lines and appurtenances. Other information items to be shown are as follows:

(1) North arrow and scale.

(2) Elevation and location of all applicable benchmarks.

(3) Existing and proposed street names.

(4) Detailed alignment of the proposed sewage collection system, with the manholes designated by pump station, with deflection angles shown at each manhole and, where possible, with each manhole tied to a permanent reference point. Lateral connections to the proposed sewer line shall also be shown.

(5) Existing and proposed underground utilities, such as electricity, gas, water, telephone, storm sewers and sanitary sewer lines. Each shall be shown in conformance with available records or as field-located by the utility concerned. Whenever available, the size and type of material used in each utility line shall be indicated.

(6) Existing and proposed improvements, such as paved streets, curbs and gutters, driveways, culverts, fire hydrants, utility poles, trees, shrubs, fences, walls and houses. Each shall be identified as to type, size, material, etc., as may be applicable.

(7) The channel centerline and top of bank of existing and proposed waterways.

(8) A uniform system of line and manhole designation shall be used.

(9) Boring information shall be shown, if available.

b. The profile shall show existing grades above the centerline of the sewer line, proposed finish grades or proposed street grades, and the invert of any drainage channel, either improved or unimproved and either crossed or paralleled. Depth and location of all utilities and storm sewers shall be shown, and each line shall be properly identified.

c. Detail sheets shall be clearly and neatly drawn with proper identification, dimension, material and other information necessary to ensure the desired construction.

d. All manholes shall be shown with manhole designation and pump station information, along with top of manhole and flow line elevations. Drop manholes shall be designated as such. Invert elevations shown shall be the flow line of the pipe extended to the centerline of the manhole. Invert elevations in and out of each manhole shall be shown. Distance between manholes shall be shown. The gradient, pipe size and type of material shall also be shown.

2.8 DESIGN STANDARD PLATES

Design standard plates for this chapter are:

Number	Title
4201	House Lateral
4202	Ductile Iron House Lateral for Deep Sewer Main
4203	Force Main Connection to Gravity Sewer
4204	Cast Iron Cleanout Box
4205	Steel Casing Installation (General)
4206	Steel Casing Installation (Gravity Sewer)
4207	Air Relief Valve
4208	Blow-Off
4209	Force Main Connection to Manhole

4210	Force Main Bend Anchorage
4211	Force Main Tee and Dead-End Anchorage
4212	Bedding for Pipe
4213	Steel Casing Installation (Force Main)
4214	Force Main Connection to HRSD
4215	Emergency Pump Connection
4216	Precast Manhole Cross-Section
4216A	60” Precast Manhole Cross-Section
4217	Manhole Invert Shaping
4218	Precast Manhole with Monolithic Extended Drop
4219	Shallow Precast Manhole
4220	Inlet and Outlet Pipes
4221	Manhole Steps
4222	Manhole Frame & Cover (Non-Watertight)
4223	Manhole Frame & Cover (Watertight w/Lock Bar)
4224	Manhole Frame & Cover (Watertight w/Gasket)
4225	Brick Manhole Cross-Section
4226	Shallow Brick Manhole
4227	External Drop Connection
4228	Pile Bent Support under Pipe

(Sections 2.9 through 2.99 are reserved. Section 3.0 is next.)

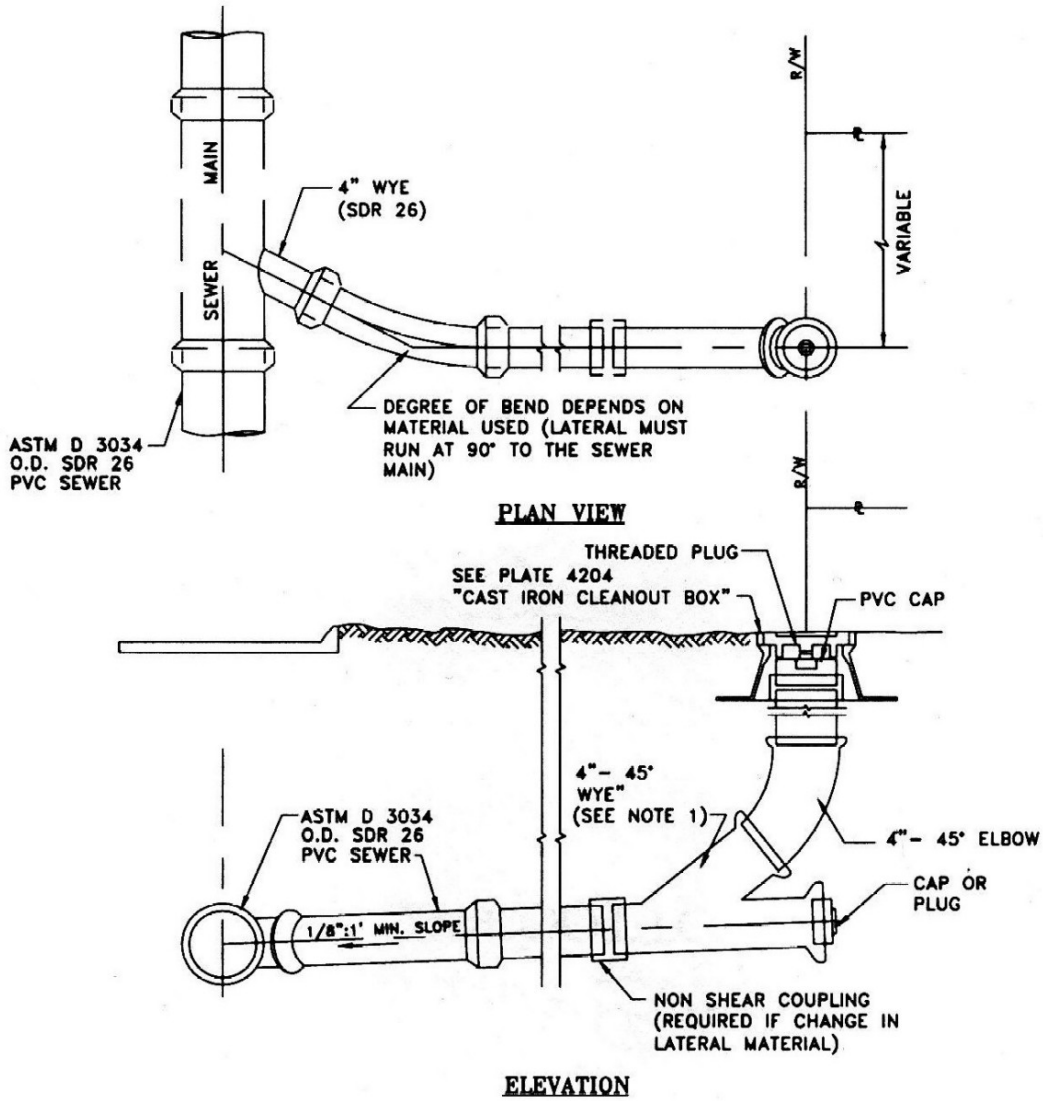

NOTES:

1. Lateral pipe shall be SDR 26, unless due to special circumstances the Director requires the pipe to be ductile iron (D.I.).
2. Also see Plate 4202 "Ductile Iron House Lateral for Deep Sewer Main."
3. Non shear coupling shall be DFW/HPI transition coupling, mission flex seal, arc coupling or approved equal.

Approved Revised March 2002

MOSTAFA A. SABBAH, Ph.D., P.E.
Director, Department of Engineering

HOUSE LATERAL

Plate 4201

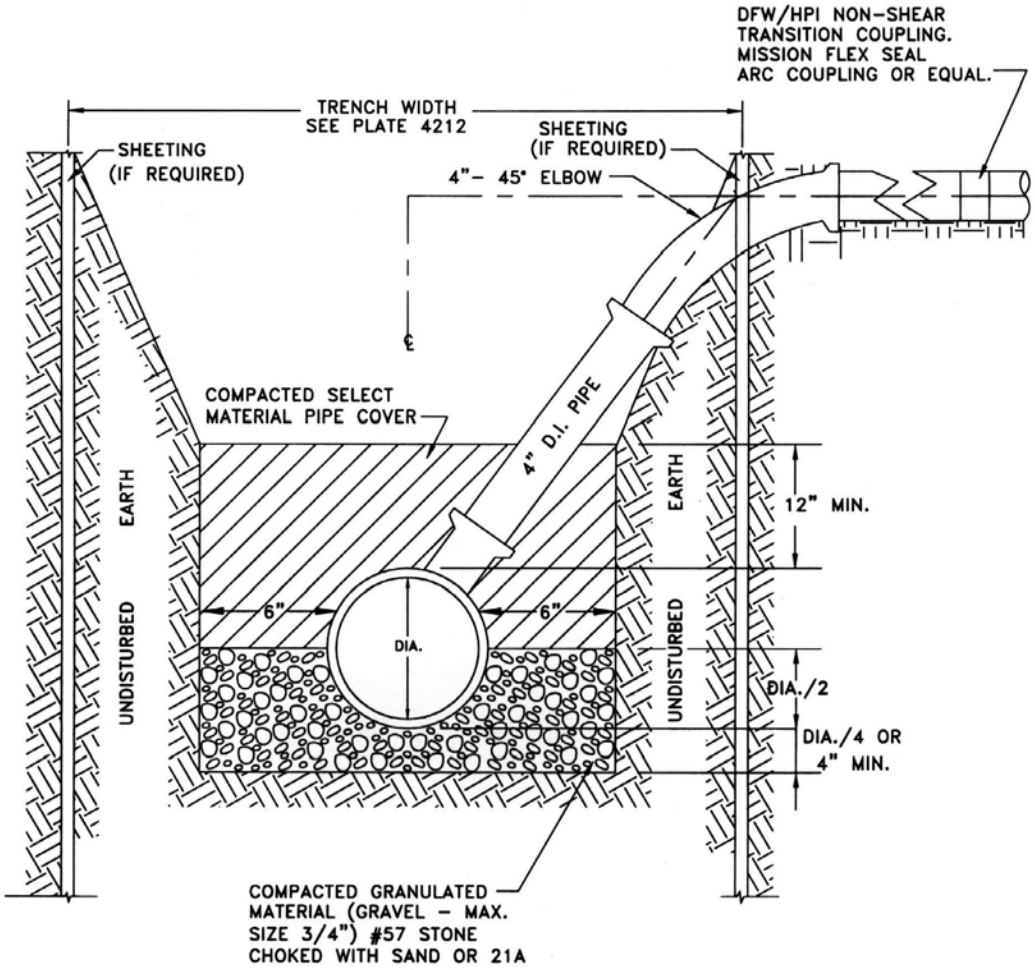

NOTES:

1. Lateral material shall be ductile iron from sewer main to five feet past the edge of the trench.
2. Also see Plate 4201 "House Lateral" and Plate 4212 "Bedding for Pipe."

Approved Revised March 2002

MOSTAFA A. SABBAH, Ph.D., P.E.
Director, Department of Engineering

DUCTILE IRON
HOUSE LATERAL FOR
DEEP SEWER MAIN

Plate 4202

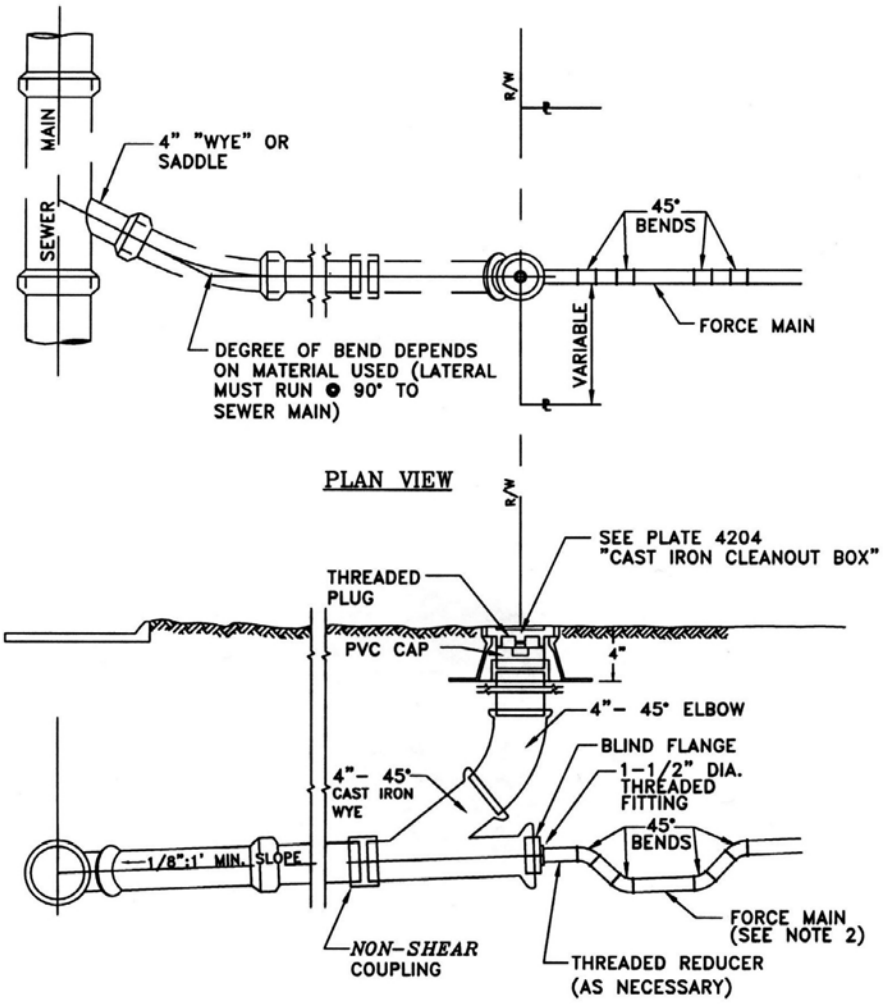

NOTES:

1. Maximum diameter of force main allowed to connected to gravity sewer in the manner detailed shall be 1 1/2". Force mains of larger diameter shall be connected at sewer manholes as detailed on Plate 4209 "Force Main Connection to Manhole."
2. Bend can be reversed, provided minimum cover of 30" is maintained.

Approved Revised March 2002

MOSTAFA A. SABBAH, Ph.D., P.E.
Director, Department of Engineering

FORCE MAIN CONNECTION TO GRAVITY SEWER

Plate 4203

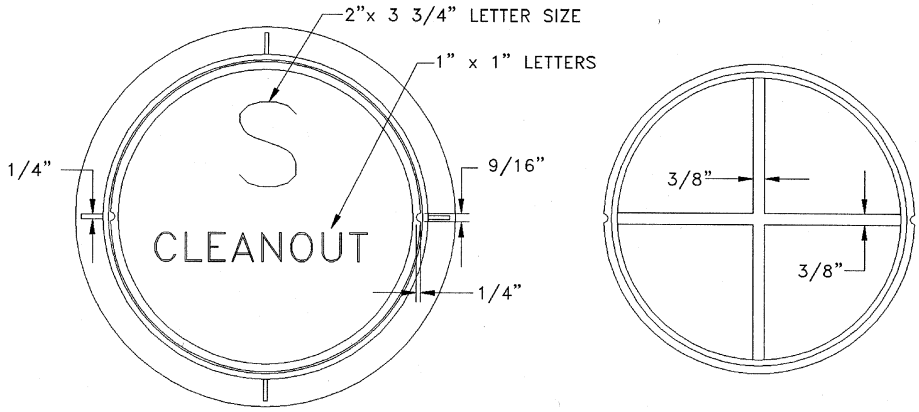

TOP VIEW

BOTTOM VIEW

COVER

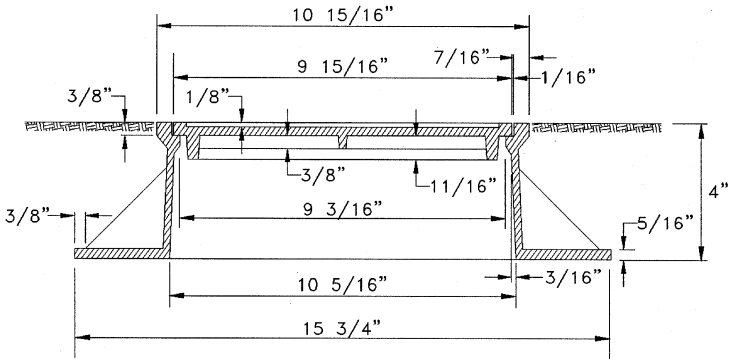

PROFILE

Approved August 1997

MOSTAFA A. SABBAH, Ph.D., P.E.
Director, Department of Engineering

CAST IRON
CLEANOUT BOX

Plate 4204

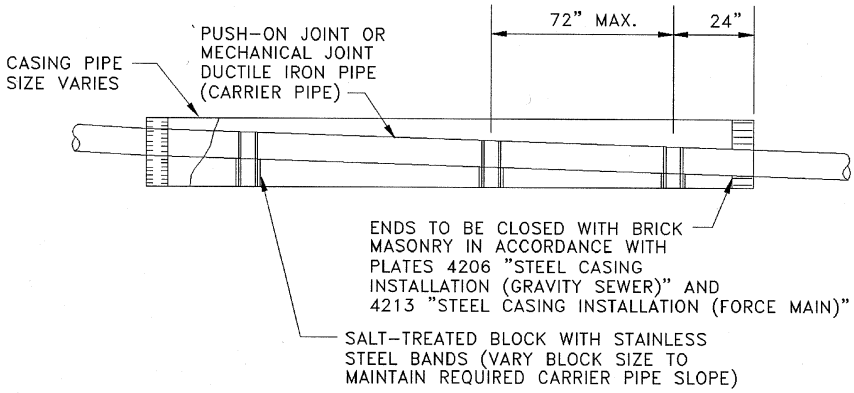

CASING PROFILE

Approved August 1997

MOSTAFA A. SABBAH, Ph.D., P.E.
Director, Department of Engineering

STEEL CASING INSTALLATION (GENERAL)

Plate 4205

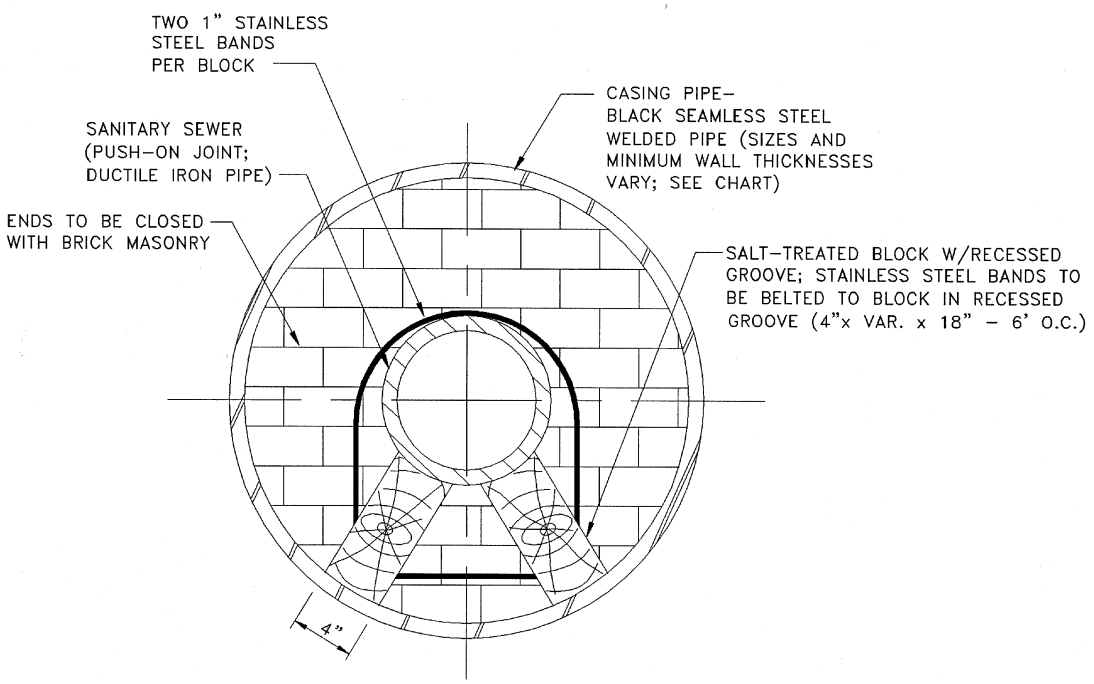

TYPICAL SECTION

CASING PIPE SIZE AND THICKNESS	
INSIDE DIA. (INCHES)	MIN. WALL THK. (INCHES)
30" TO 36"	3/8"
LESS THAN 30"	1/4"

CASING PIPE SIZE	
GRAVITY SEWER MAIN SIZE (INCHES)	MIN. CASING PIPE SIZE (INCHES)
8"	18"
10"	24"
12"	24"
14"	30"
16"	30"
18"	36"
20"	36"
24"	36"

NOTE: All casings under railroad tracks must have 0.406" minimum wall thicknesses.

CORPORATION OF NEWPORT NEWS VIRGINIA

Approved August 1997

MOSTAFA A. SABBAH, Ph.D., P.E.
Director, Department of Engineering

STEEL CASING INSTALLATION (GRAVITY SEWER)

Plate 4206

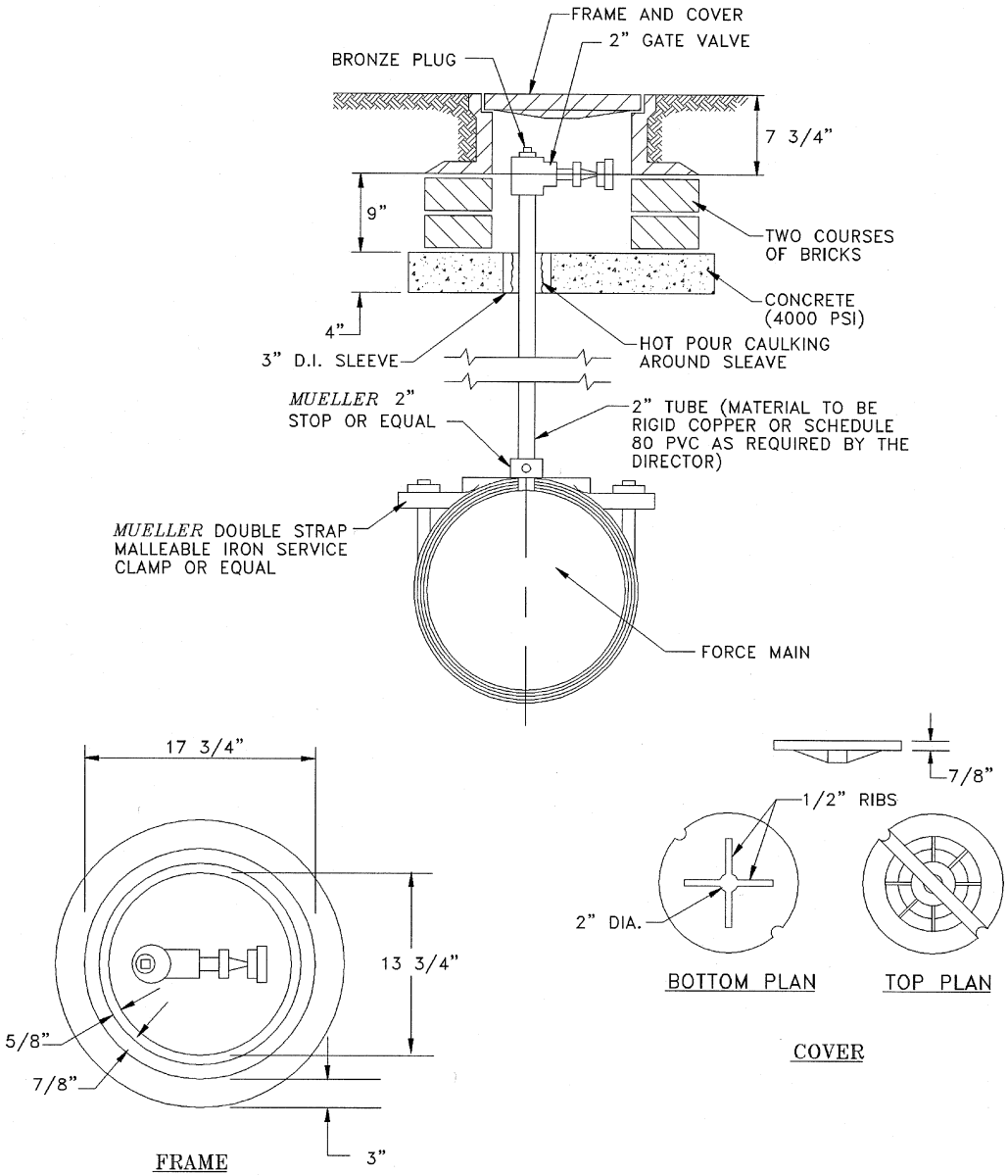

NOTES:

1. Frame and cover to be as shown (Capital Foundry B1200 or equal) or as required by the Director.
2. The word "Sewer" to be stamped on cover. If located in a street, a roadway-type cover is to be used.

Approved August 1997

MOSTAFA A. SABBAH, Ph.D., P.E.
Director, Department of Engineering

AIR RELIEF VALVE

Plate 4207

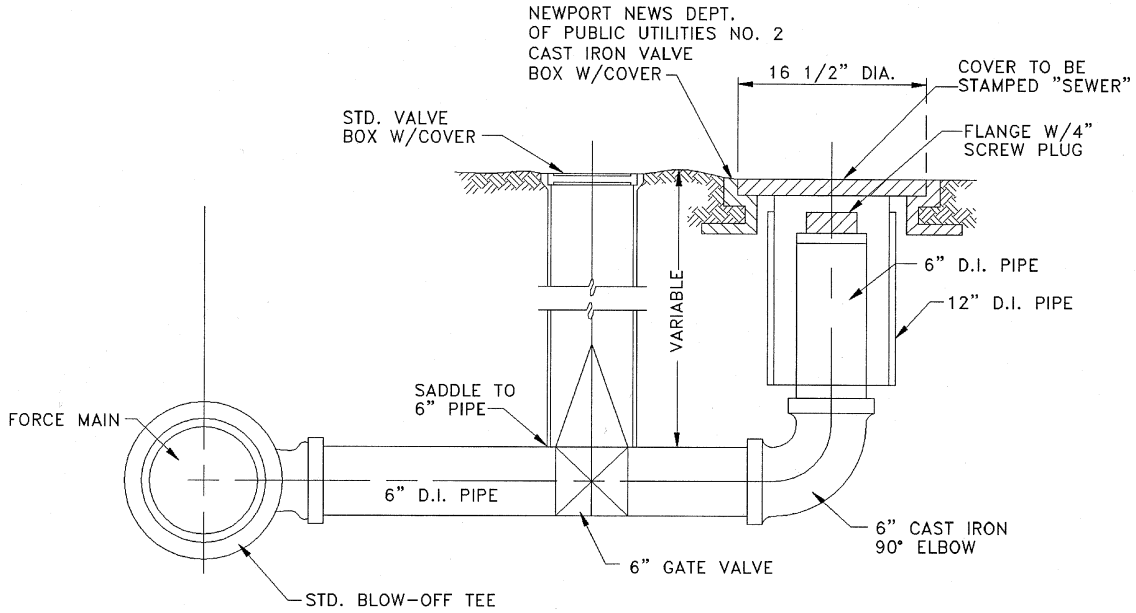

PROFILE

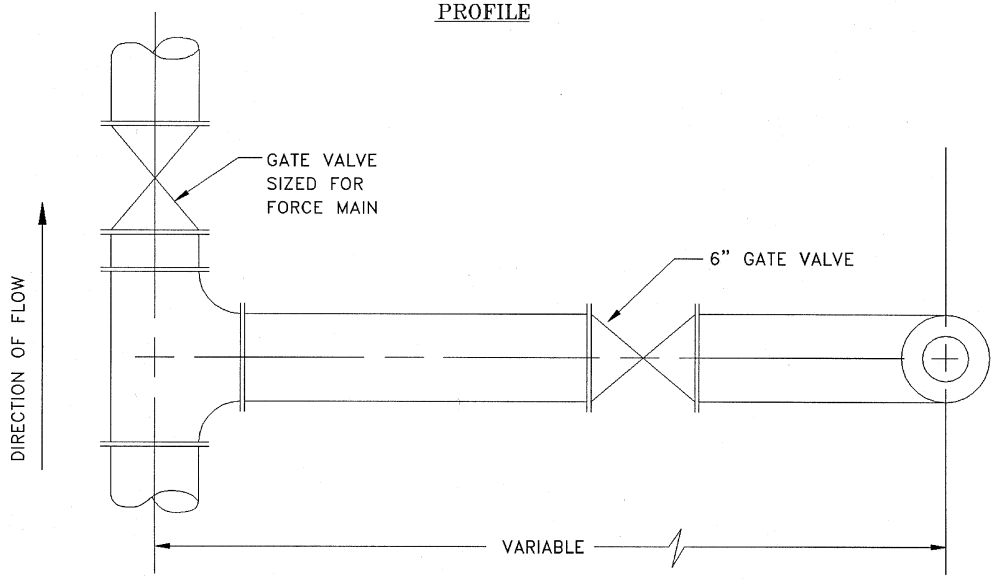

PLAN

Approved August 1997

MOSTAFA A. SABBAH, Ph.D., P.E.
Director, Department of Engineering

BLOW-OFF

Plate 4208

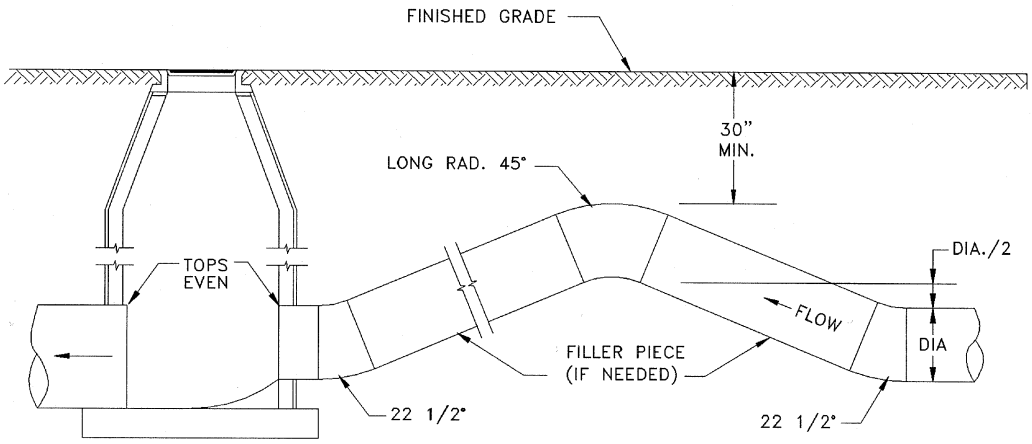

FOR DISCHARGE INTO MANHOLE MORE THAN 54" DEEP

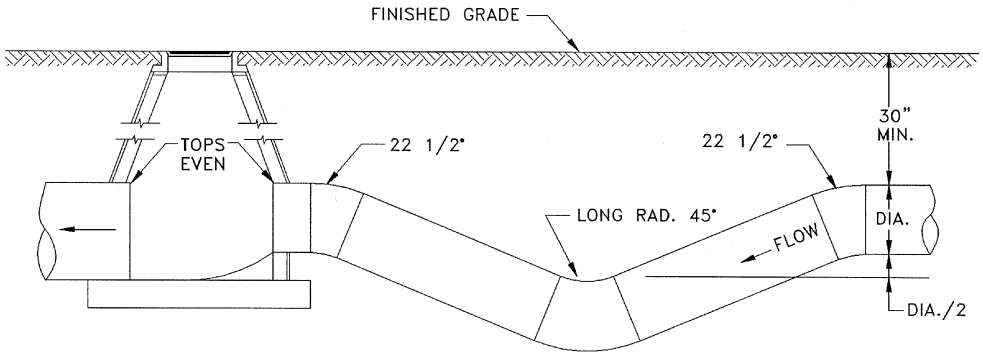

FOR DISCHARGE INTO MANHOLE LESS THAN 54" DEEP

NOTE: Interior of receiving manhole to be coated with *Sikagard 62* or approved equal.

Approved April 1997

MOSTAFA A. SABBAH, Ph.D., P.E.
Director, Department of Engineering

FORCE MAIN CONNECTION TO MANHOLE

Plate 4209

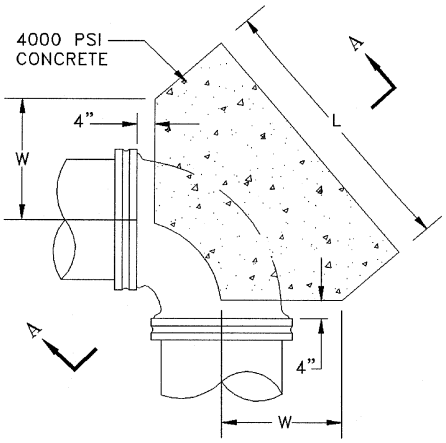

90° BEND

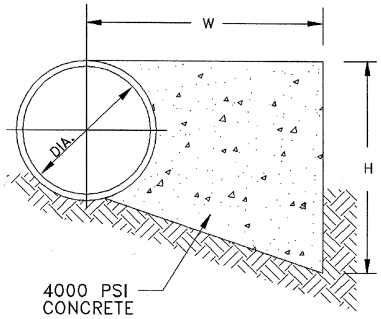

SECTION A–A

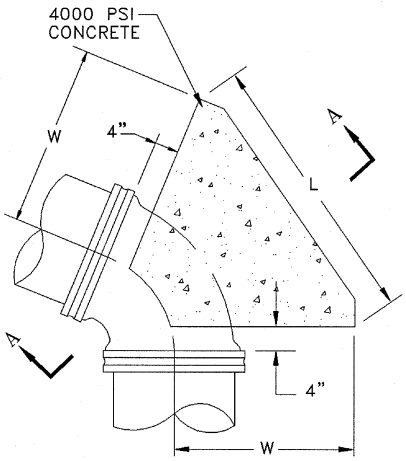

22 1/2° & 45° BENDS

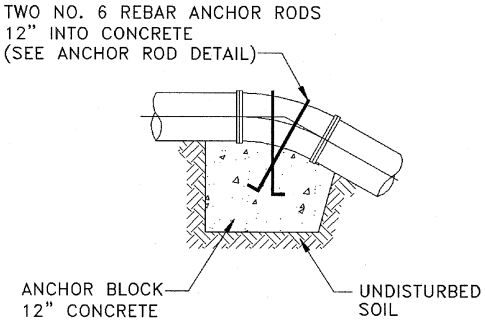

VERTICAL BEND

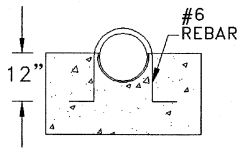

ANCHOR ROD DETAIL

HORIZONTAL BENDS

NOTES:

1. Concrete not to be placed on bolts of mechanical joints.
2. "W" to be sufficient to provide solid backing to undisturbed earth.
3. For required bearing area, see Plate 4211 "Force Main Tee and Dead-End Anchorage."

Approved August 1997

MOSTAFA A. SABBAH, Ph.D., P.E.
Director, Department of Engineering

FORCE MAIN
BEND ANCHORAGE

Plate 4210

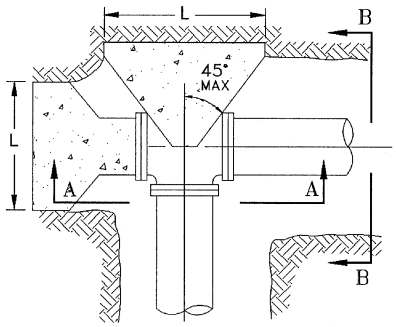

PLAN VIEW (TEE)

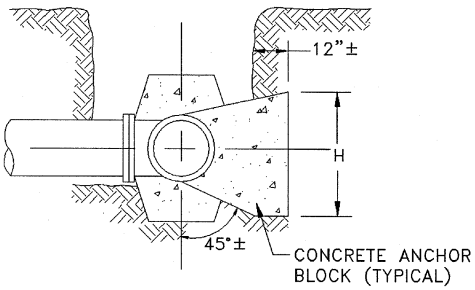

SECTION B–B

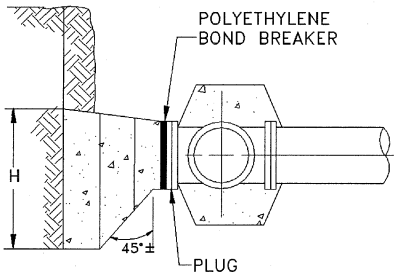

SECTION A–A

PIPE SIZE (INCHES)	DEGREE OF BEND	MIN. CONC. ANCHOR BLOCK DIM. WORKING PRESSURE							
		75 PSI		100 PSI		125 PSI		150 PSI	
		L'	H'	L'	H'	L'	H'	L'	H'
4",6"	90°	2.5	1.0	2.5	1.5	2.0	2.0	2.5	2.0
	45°	1.5	1.0	2.0	1.0	2.0	1.0	2.5	1.0
	22-1/2°	1.0	1.0	1.0	1.0	1.0	1.0	1.5	1.0
8"	90°	2.0	2.0	2.5	2.5	3.0	2.5	4.0	2.0
	45°	2.5	1.0	2.0	1.5	2.0	2.0	2.5	2.0
	22-1/2°	1.5	1.0	1.5	1.0	2.0	1.0	2.5	1.0
10",12"	90°	3.0	3.0	4.0	3.0	5.0	3.0	5.0	4.0
	45°	2.5	2.0	3.5	2.0	4.0	2.5	4.0	2.5
	22-1/2°	2.5	1.0	2.5	1.5	2.5	2.0	2.5	2.0
14"	90°	4.0	4.0	4.5	4.5	5.0	5.0	6.0	5.0
	45°	3.0	3.0	3.5	3.5	3.5	3.5	4.0	4.0
	22-1/2°	2.0	2.0	2.5	2.5	2.5	2.5	3.0	3.0
16"	90°	4.5	4.5	5.0	5.0	7.0	4.5	7.0	4.5
	45°	3.0	3.0	3.5	3.5	4.0	4.0	4.5	4.5
	22-1/2°	2.5	2.5	2.5	2.5	3.0	3.0	3.5	3.5

NOTES:

1. Information in the table based on 2000 PSF soil bearing capacity and for a test pressure of 1.5 x working pressure.
2. All concrete anchors to be 4000 PSI concrete.
3. Concrete anchor block dimensions for tees to be the same as shown for 90° bend.
4. Concrete anchor block dimensions for dead–ends to be the same as shown. (See Plate 4210 "Force Main Bend Anchorage").
5. Coat exposed rebar with bitumastic paint.
6. Restrain two joints at bend with M.J. retainer glands.

CORPORATION OF NEWPORT NEWS 1958 VIRGINIA

Approved August 1997

MOSTAFA A. SABBAH, Ph.D., P.E.
Director, Department of Engineering

FORCE MAIN
TEE AND DEAD–END
ANCHORAGE

Plate 4211

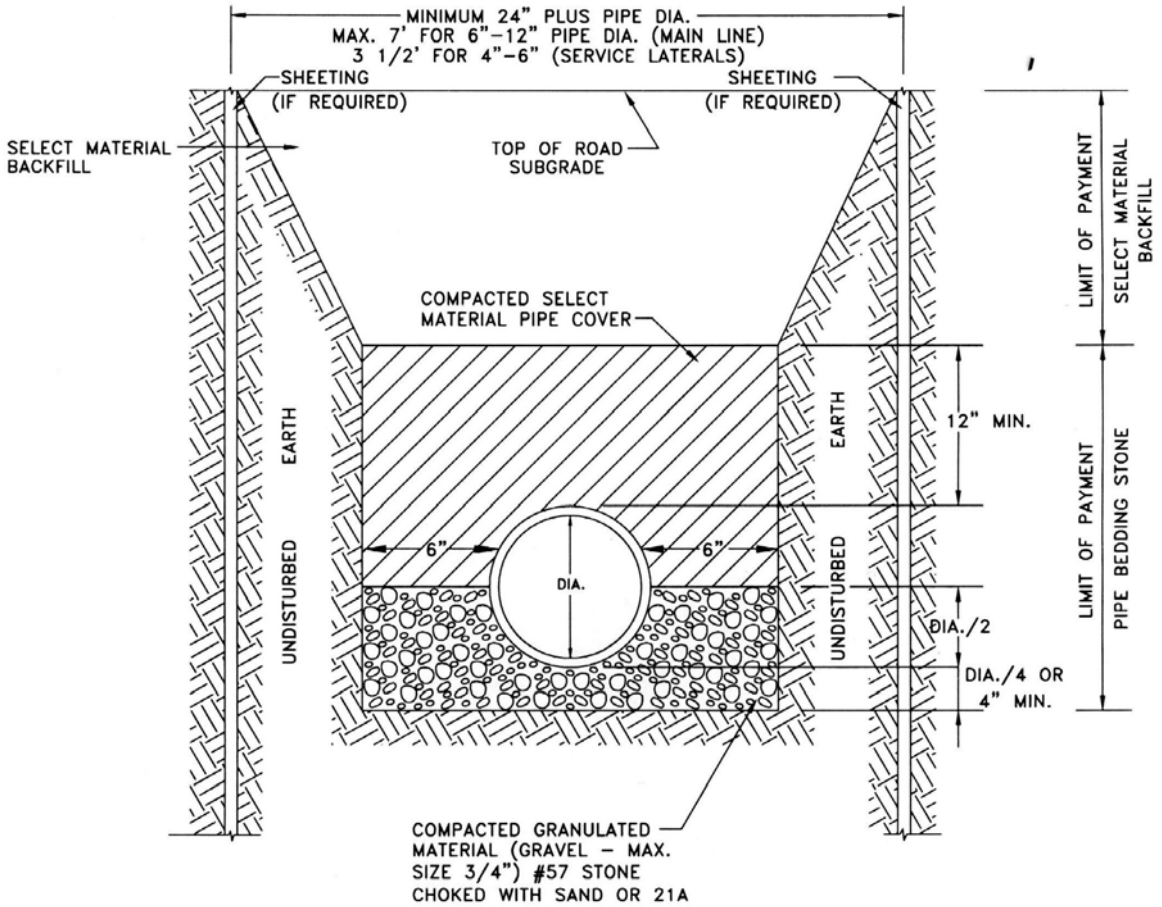

NOTES:

1. Select material pipe cover shall be 12" (minimum) deep over top of pipe.
2. Select material pipe cover shall not be used for ductile iron sewer pipe.
3. Select material backfill shall be CBR 20 compacted to 95% density. Backfill compacted in 12" lifts.

Approved Revised March 2002

MOSTAFA A. SABBAH, Ph.D., P.E.
Director, Department of Engineering

BEDDING
FOR PIPE

Plate 4212

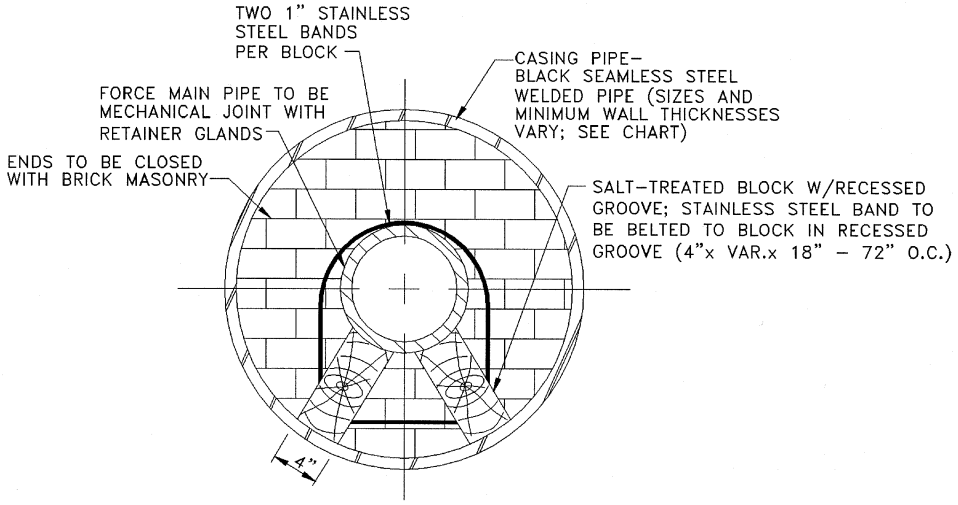

TYPICAL SECTION

CASING PIPE SIZE AND THICKNESS	
INSIDE DIA. (INCHES)	MIN. WALL THK. (INCHES)
30" TO 36"	3/8"
LESS THAN 30"	1/4"

CASING PIPE SIZE	
FORCE MAIN PIPE SIZE (INCHES)	MIN. CASING PIPE SIZE (INCHES)
6"	18"
8"	24"
10"	24"
12"	24"
14"	30"
16"	30"
18"	36"
20"	36"
24"	36"

NOTE: All casings under railroad tracks must have 0.406" minimum wall thicknesses.

Approved August 1997

MOSTAFA A. SABBAH, Ph.D., P.E.
Director, Department of Engineering

STEEL CASING INSTALLATION (FORCE MAIN)

Plate 4213

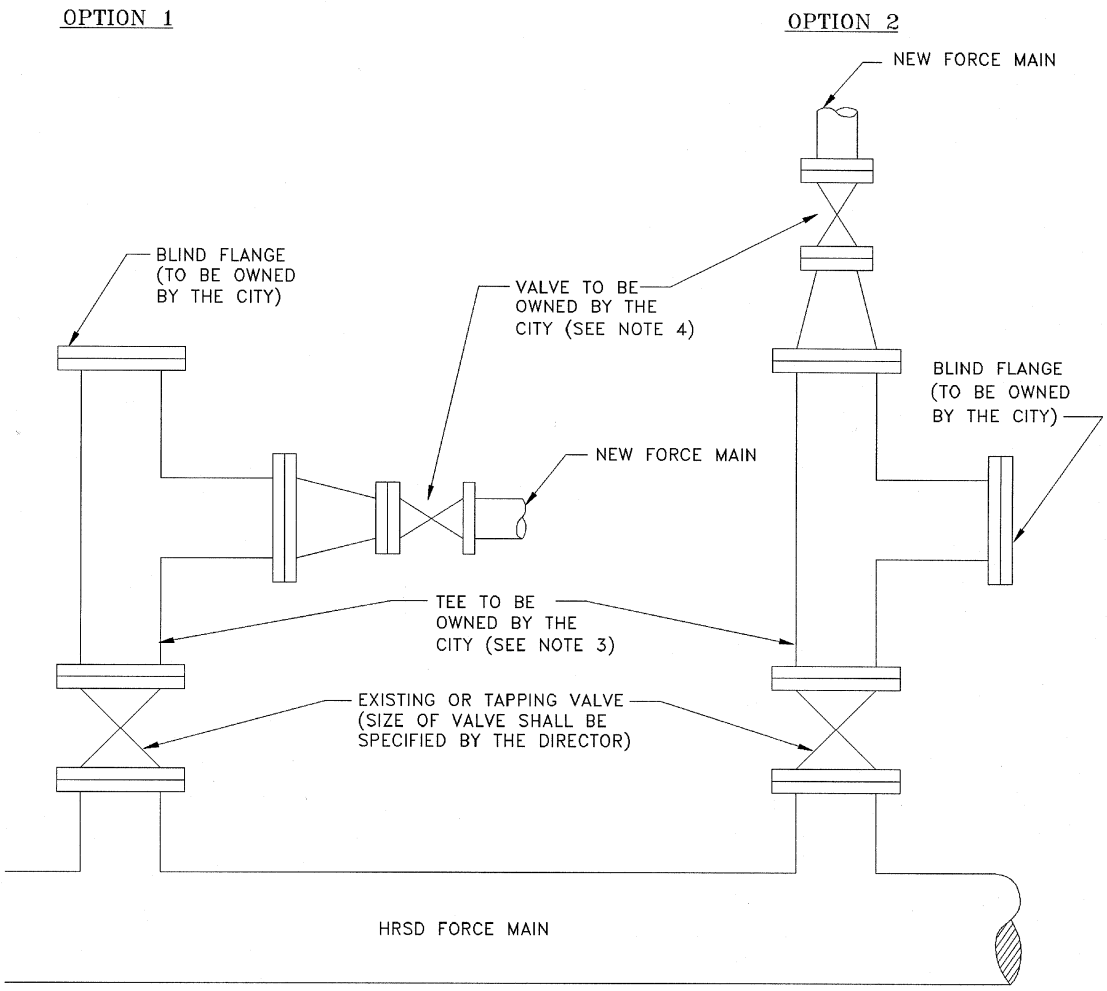

NOTES:

1. Direction of tee branch to be determined by the Director.
2. Tee and valve to be flanged.
3. Tee to be same size as existing valve or tapping valve.
4. Minimum size valve to be used is 3" with "non-rising" stem and 2" square wrench nut.
5. A gate valve with valve box shall be located at the City right-of-way for private force main.
6. Connections to HRSD force mains require a minimum 8" valve, which shall be owned by HRSD.
7. Proposed connections to HRSD sewer lines shall be approved by HRSD.

Approved August 1997

MOSTAFA A. SABBAH, Ph.D., P.E.
Director, Department of Engineering

FORCE MAIN CONNECTION TO HRSD

Plate 4214

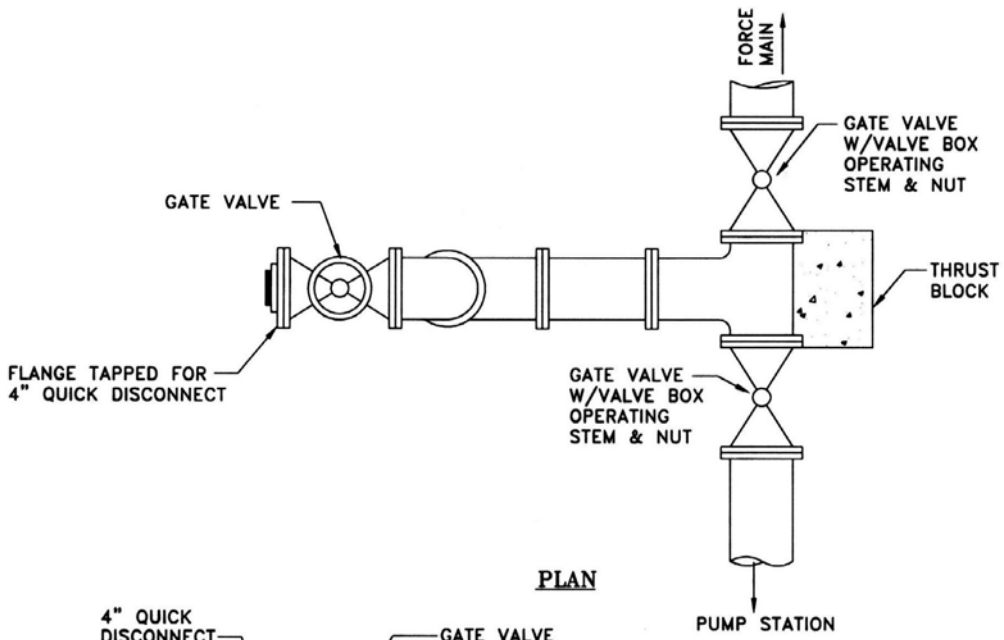

PLAN

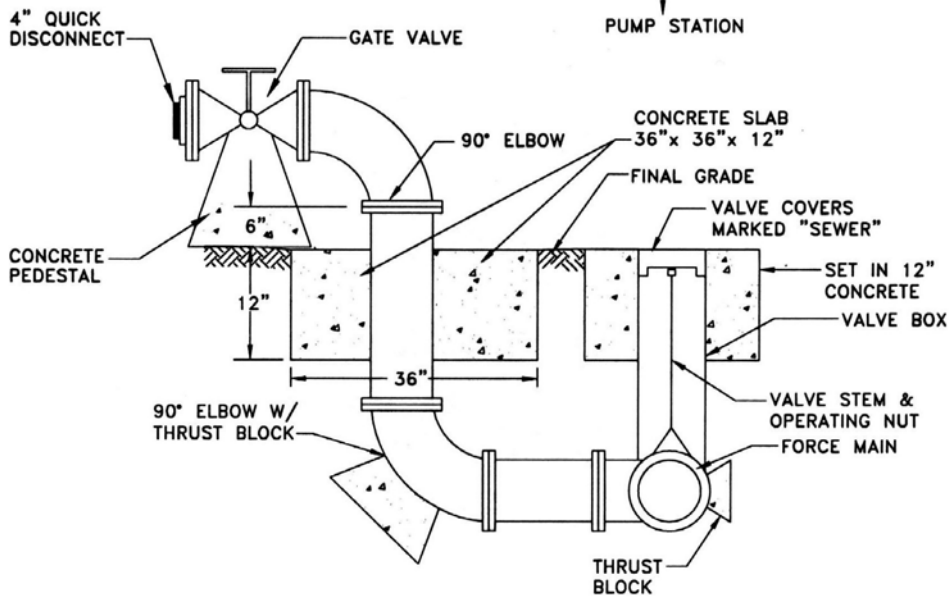

ELEVATION

NOTES:

1. Concrete to be 4000 PSI.
2. For thrust block sizing, see Plate 4211 "Force Main Tee and Dead-End Anchorage."
3. Pipe size to be specified by the Director.
4. Pipe material shall be flanged D.I. pipe, with stainless steel bolts.

Approved Revised March 2002

MOSTAFA A. SABBAH, Ph.D., P.E.
Director, Department of Engineering

EMERGENCY PUMP CONNECTION

Plate 4215

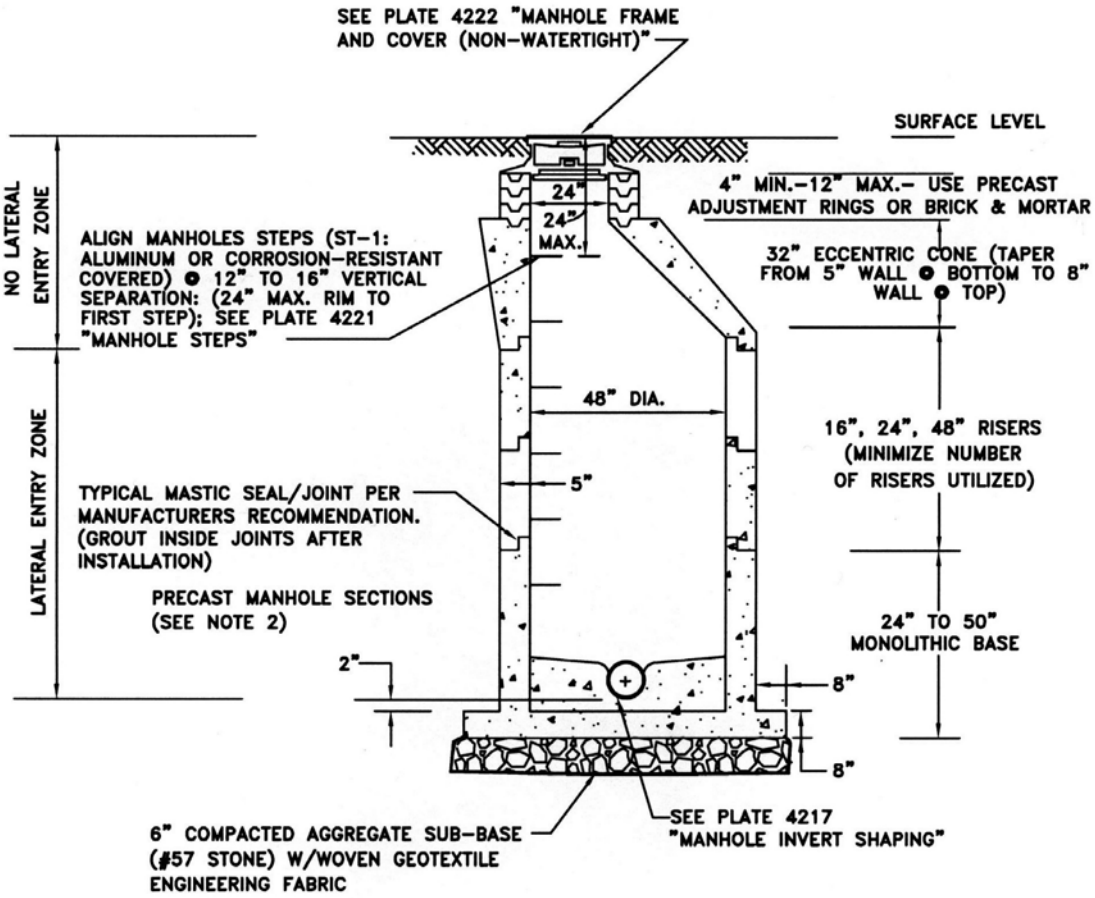

NOTES:

1. Sewer lines connected directly to a manhole or to short stubs integral with a manhole shall be made with flexible joints approved by the Director.
2. Precast manhole sections in compliance with ASTM-C-478 using class A-4 concrete (4000 psi) and reinforcing fabric. Provide maximum of two lift holes per section. Plug lift holes watertight with rubber plug and grout after installation.

Approved Revised October 2002

MOSTAFA A. SABBAH, Ph.D., P.E.
Director, Department of Engineering

PRECAST MANHOLE CROSS-SECTION

Plate 4216

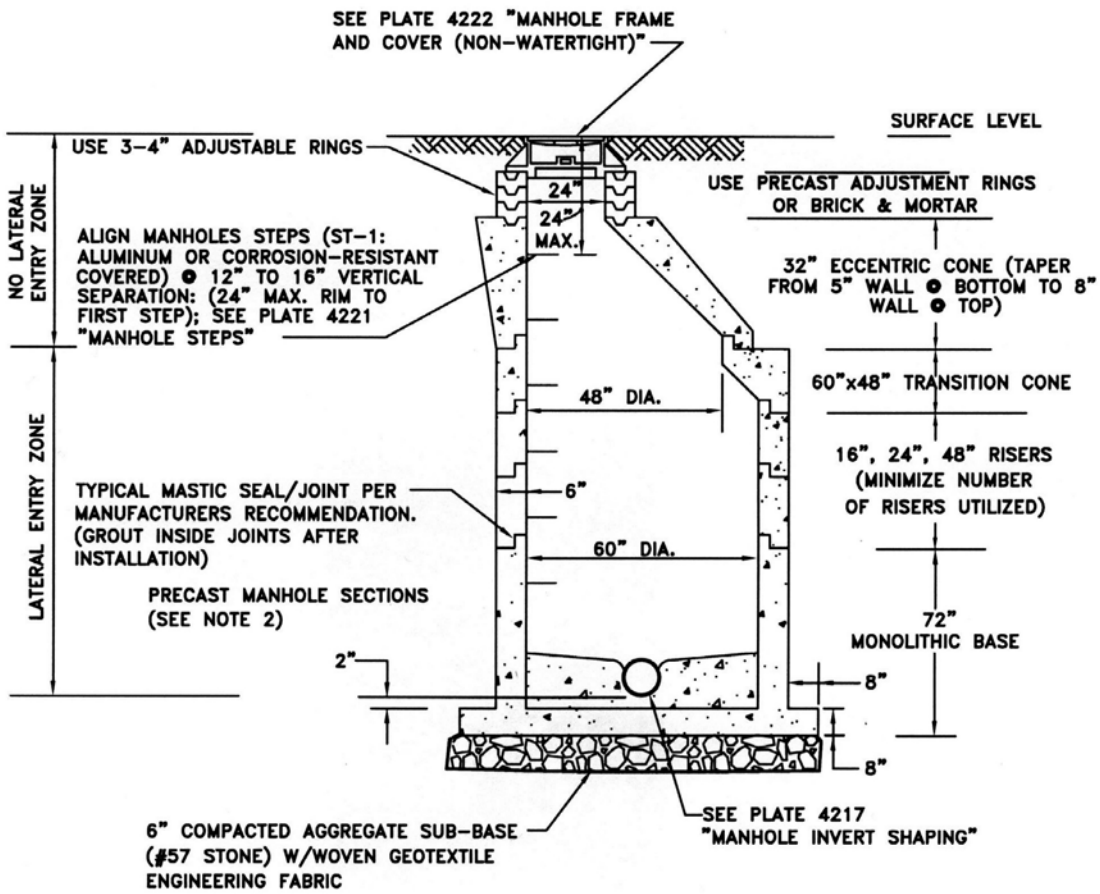

NOTES:

1. Sewer lines connected directly to a manhole or to short stubs intergral with a manhole shall be made with flexible joints as directed by Engineer.
2. Precast manhole sections in compliance with ASTM-C-478 using class A-4 concrete (4000 psi) and reinforcing fabric. Provide maximum of two lift holes per section. Plug lift holes watertight with rubber plug and grout after installation.

Approved Revised October 2002

MOSTAFA A. SABBAH, Ph.D., P.E.
Director, Department of Engineering

60" PRECAST MANHOLE CROSS-SECTION

Plate 4216A

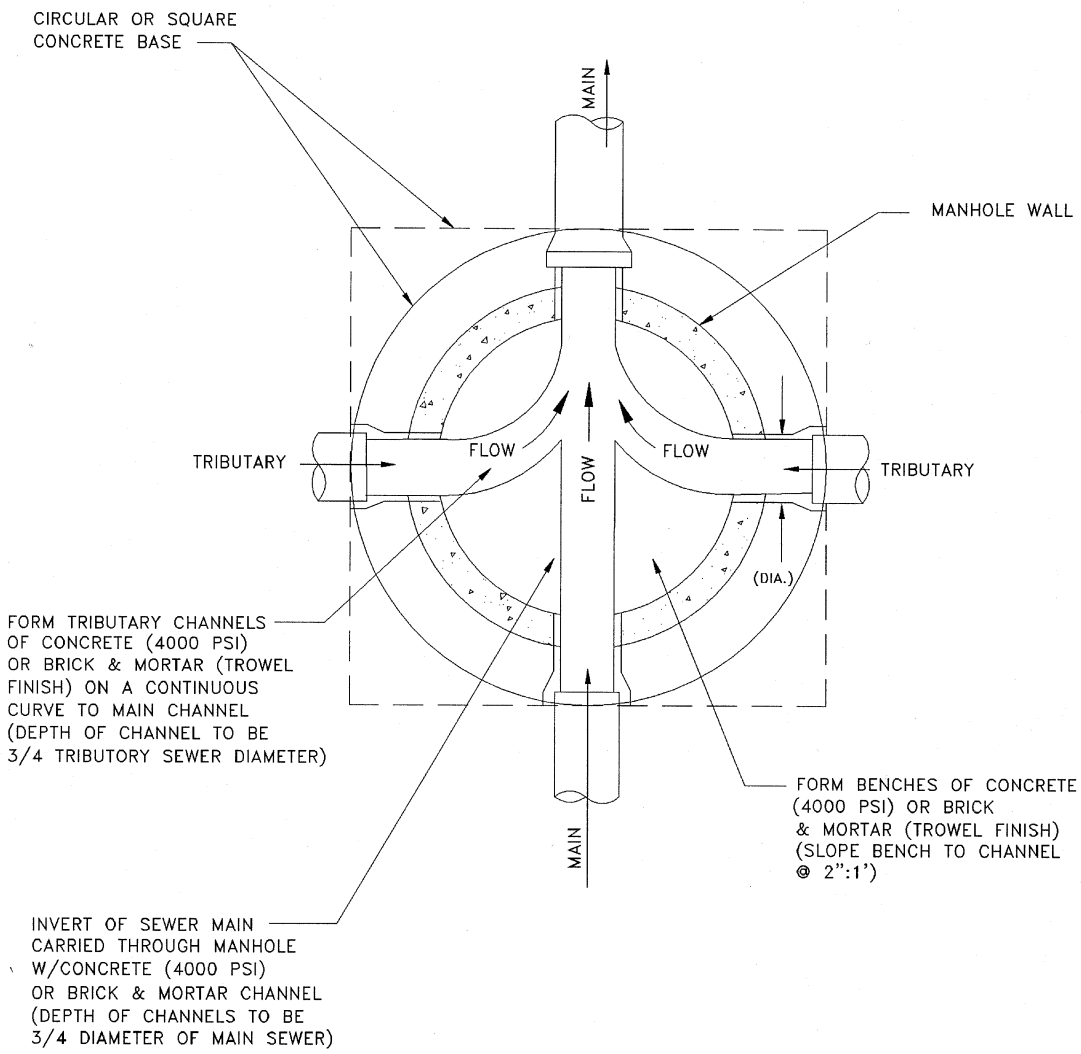

Approved August 1997

MOSTAFA A. SABBAH, Ph.D., P.E.
Director, Department of Engineering

MANHOLE INVERT SHAPING

Plate 4217

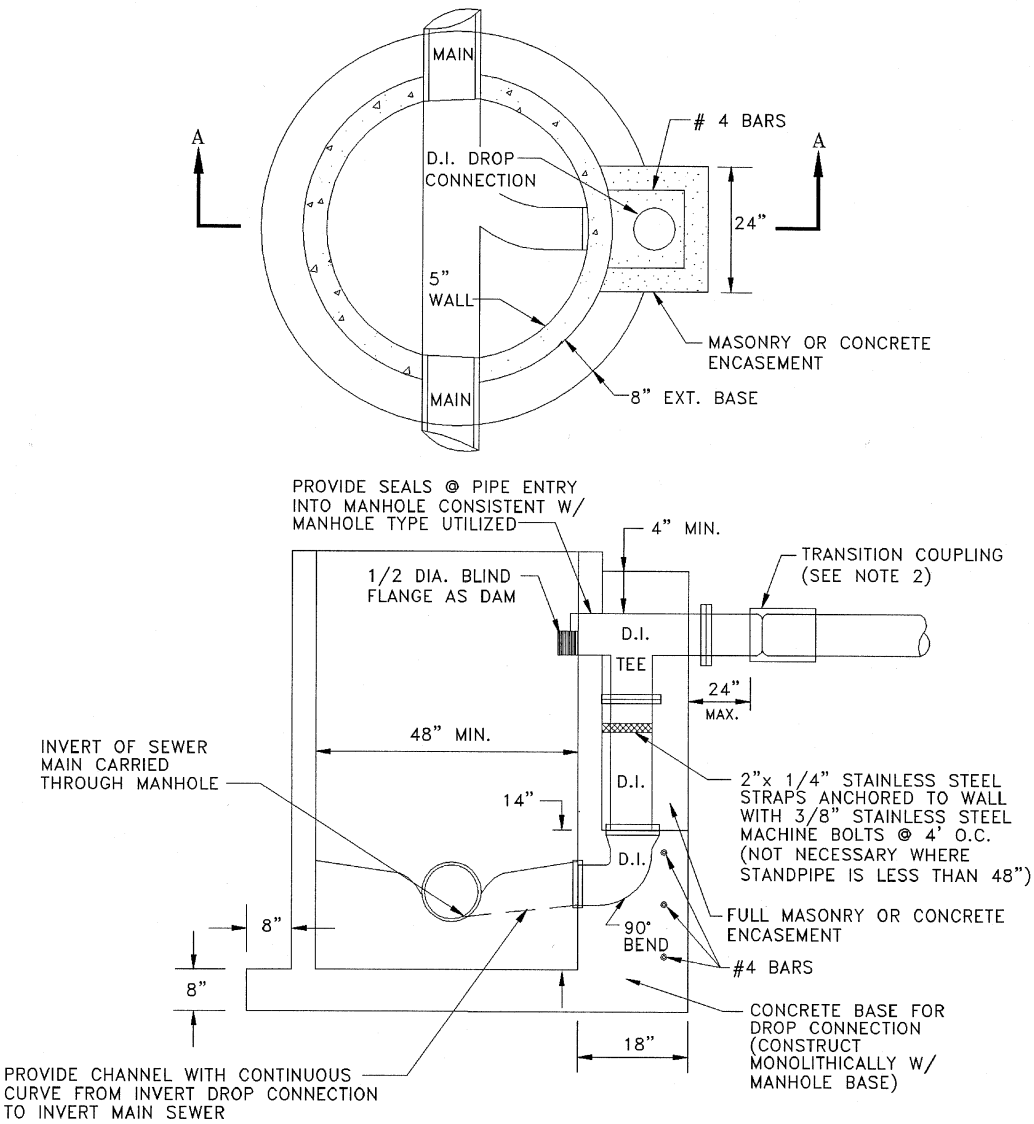

SECTION A–A

NOTES:

1. All pipe material shall be ductile iron (D.I.).
2. Main to D.I. transition to be made with coupling approved by the Director.
3. Crown of main and centerline of 90° drop to match.
4. Drop pipe may be one size smaller than main (6" minimum).
5. Placement of drop pipe not to conflict with steps.

Approved August 1997

MOSTAFA A. SABBAH, Ph.D., P.E.
Director, Department of Engineering

PRECAST MANHOLE WITH MONOLITHIC EXTENDED DROP

Plate 4218

(Addendum 1, December 15, 2005)

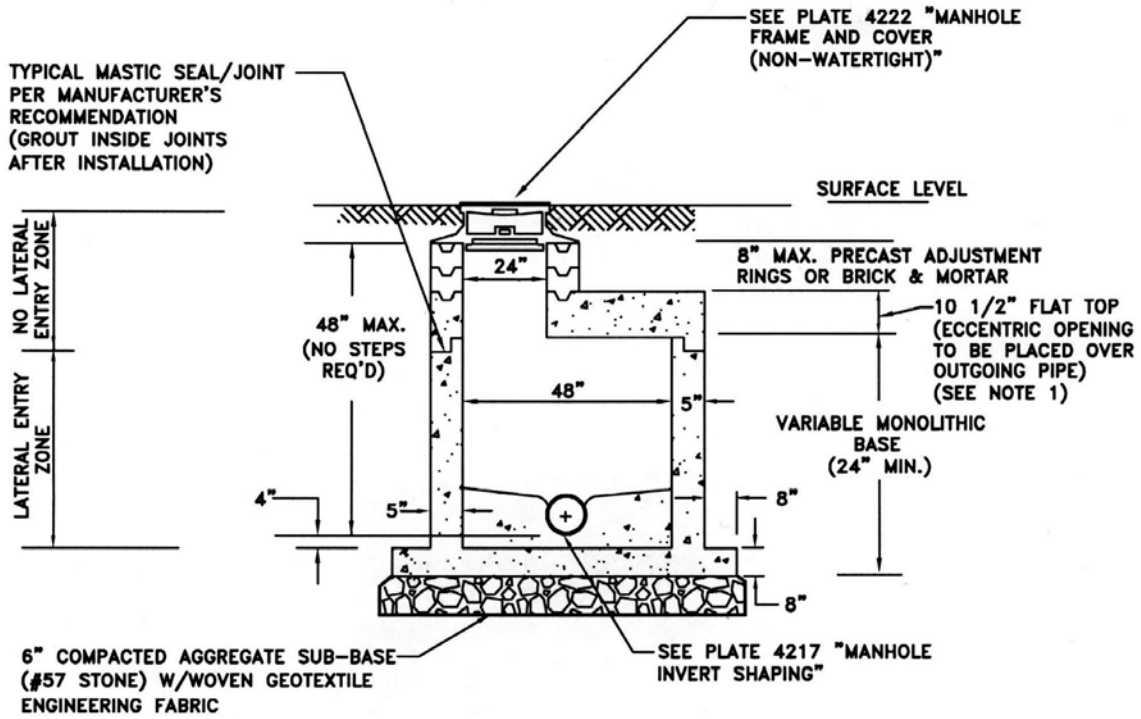

NOTES:

1. Flat top may be replaced with 16" eccentric shallow cone.
2. Sewer lines connected directly to a manhole or to short stubs integral with a manhole shall be made with flexible joints approved by the Director.
3. Precast manhole sections in compliance with ASTM-C-478 using Class A-4 concrete (4000 psi) and reinforcing fabric in compliance with ASTM A-185 (0.12 in./ft.). Provide maximum of two lift holes per section. Plug lift holes watertight with rubber plug and grout after installation.

Approved Revised October 2002

MOSTAFA A. SABBAH, Ph.D., P.E.
Director, Department of Engineering

SHALLOW PRECAST MANHOLE

Plate 4219

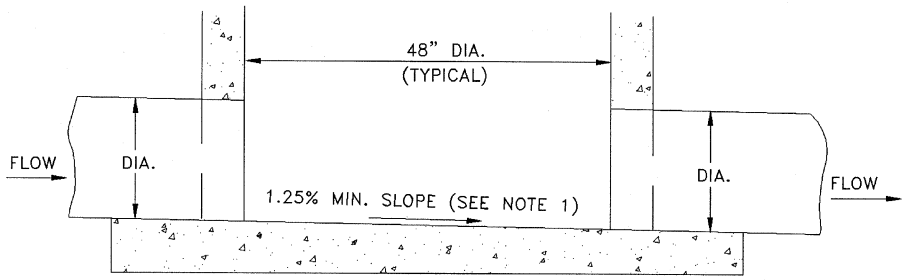

INLET & OUTLET PIPES OF EQUAL DIAMETER

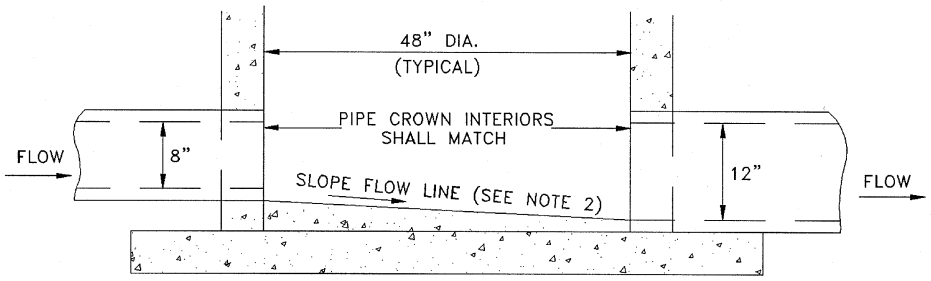

INLET & OUTLET PIPES OF DIFFERING DIAMETER

NOTES:

1. Maintain minimum 0.05' drop across manhole.
2. Slope as necessary from bottom of inlet pipe to bottom of outlet pipe.

Approved August 1997

MOSTAFA A. SABBAH, Ph.D., P.E.
Director, Department of Engineering

INLET AND OUTLET PIPES

Plate 4220

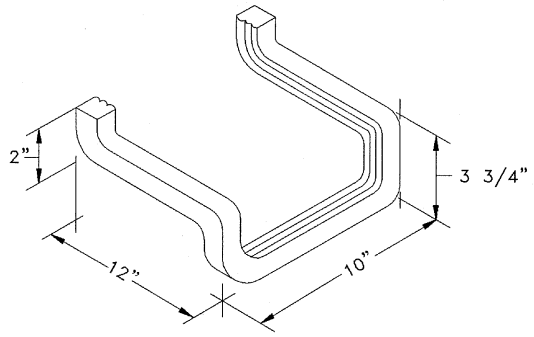

ISOMETRIC VIEW

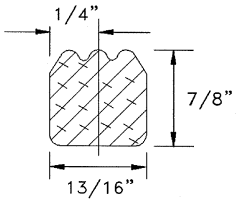

SECTION

CAST-IN-PLACE BRICK MANHOLES
(SEE NOTE 1)

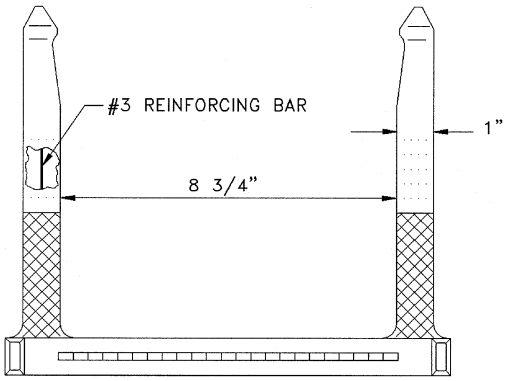

PLAN VIEW

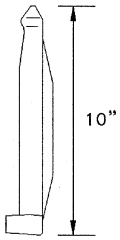

SIDE ELEVATION

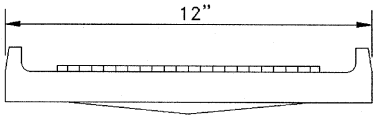

FRONT ELEVATION

PRECAST CONCRETE MANHOLES
(SEE NOTE 2)

NOTES:

1. Step is made of aluminum alloy type 6061-T6 conforming to Federal Specifications QQ-A-200/8. Maximum spacing of steps: 16" O.C.
2. Step is made of 3/8" steel reinforcing rod embedded in polypropylene plastic. Maximum spacing of steps: 16" O.C.

Approved August 1997

MOSTAFA A. SABBAH, Ph.D., P.E.
Director, Department of Engineering

MANHOLE STEPS

Plate 4221

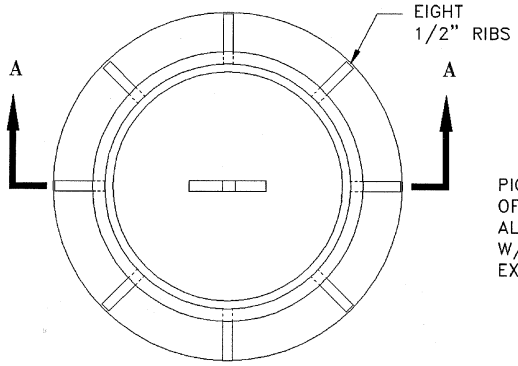

PLAN VIEW W/O COVER

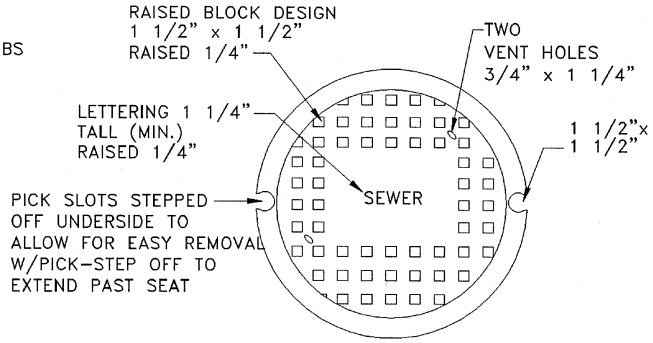

PLAN VIEW (COVER)

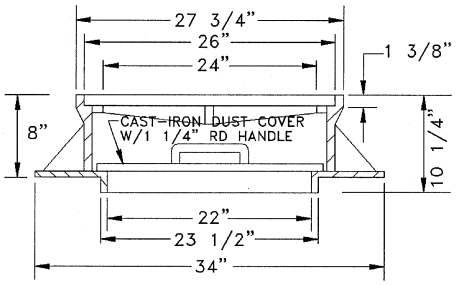

SECTION A-A

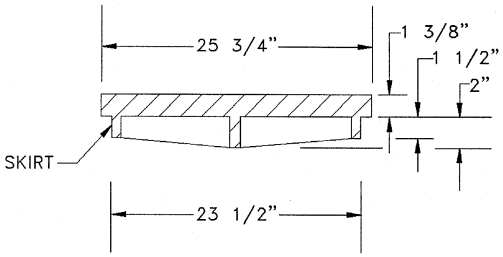

ELEVATION (COVER)

ALTERNATE COVER:

1. Same as above with 23 1/2" diameter skirt 1 1/2" deep except with solid cover lettered "Sanitary Sewer."
2. Use of alternate cover subject to approval by the Director.

Approved August 1997

MOSTAFA A. SABBAH, Ph.D., P.E.
Director, Department of Engineering

MANHOLE
FRAME & COVER
(NON-WATERTIGHT)

Plate 4222

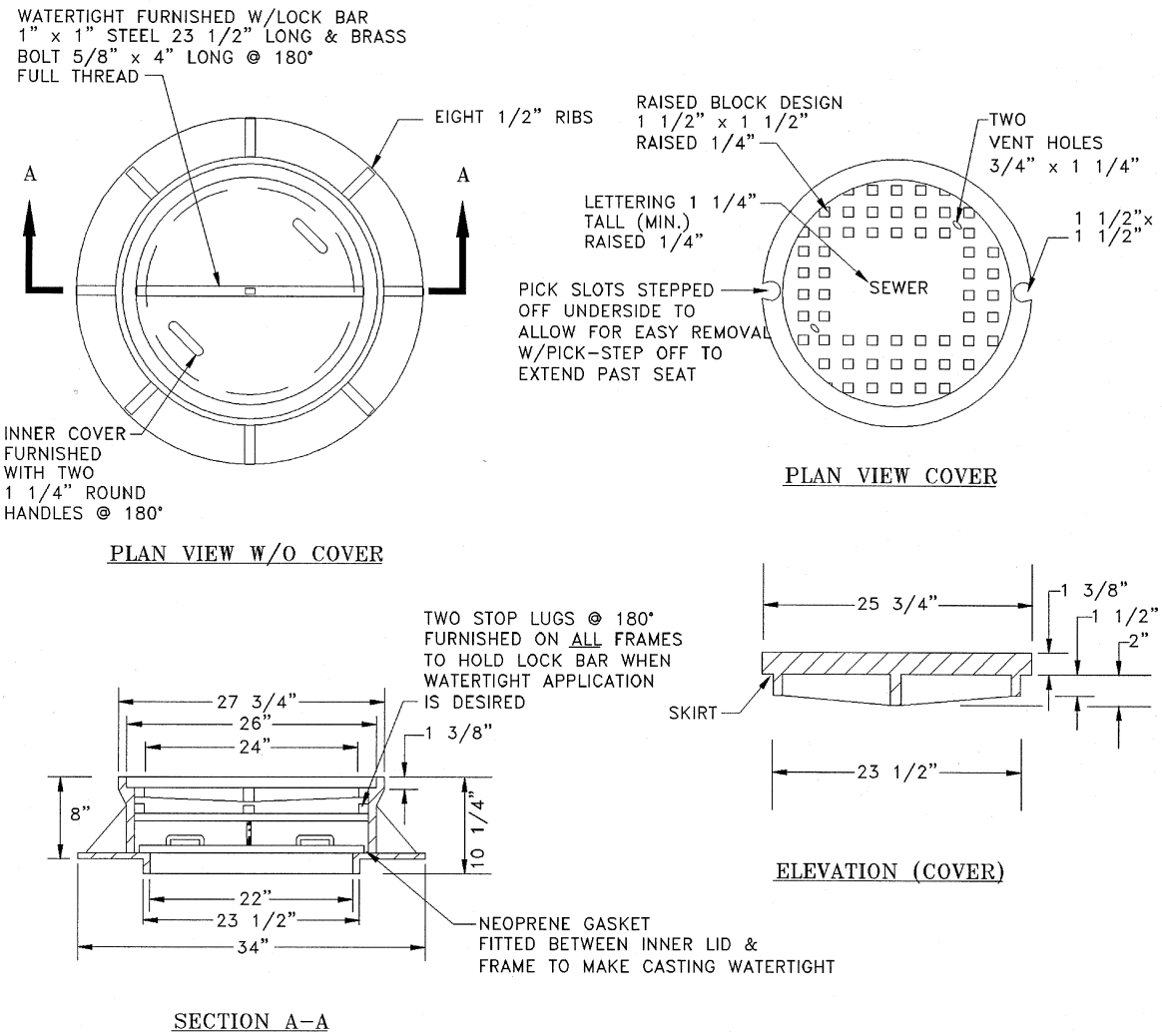

ALTERNATE COVER:

1. Same as above with 23 1/2" diameter skirt 1 1/2" deep except with solid cover lettered "Sanitary Sewer."

2. Use of alternate cover subject to approval by the Director.

Approved August 1997

MOSTAFA A. SABBAH, Ph.D., P.E.
Director, Department of Engineering

MANHOLE
FRAME & COVER
(WATERTIGHT W/LOCK BAR)

Plate 4223

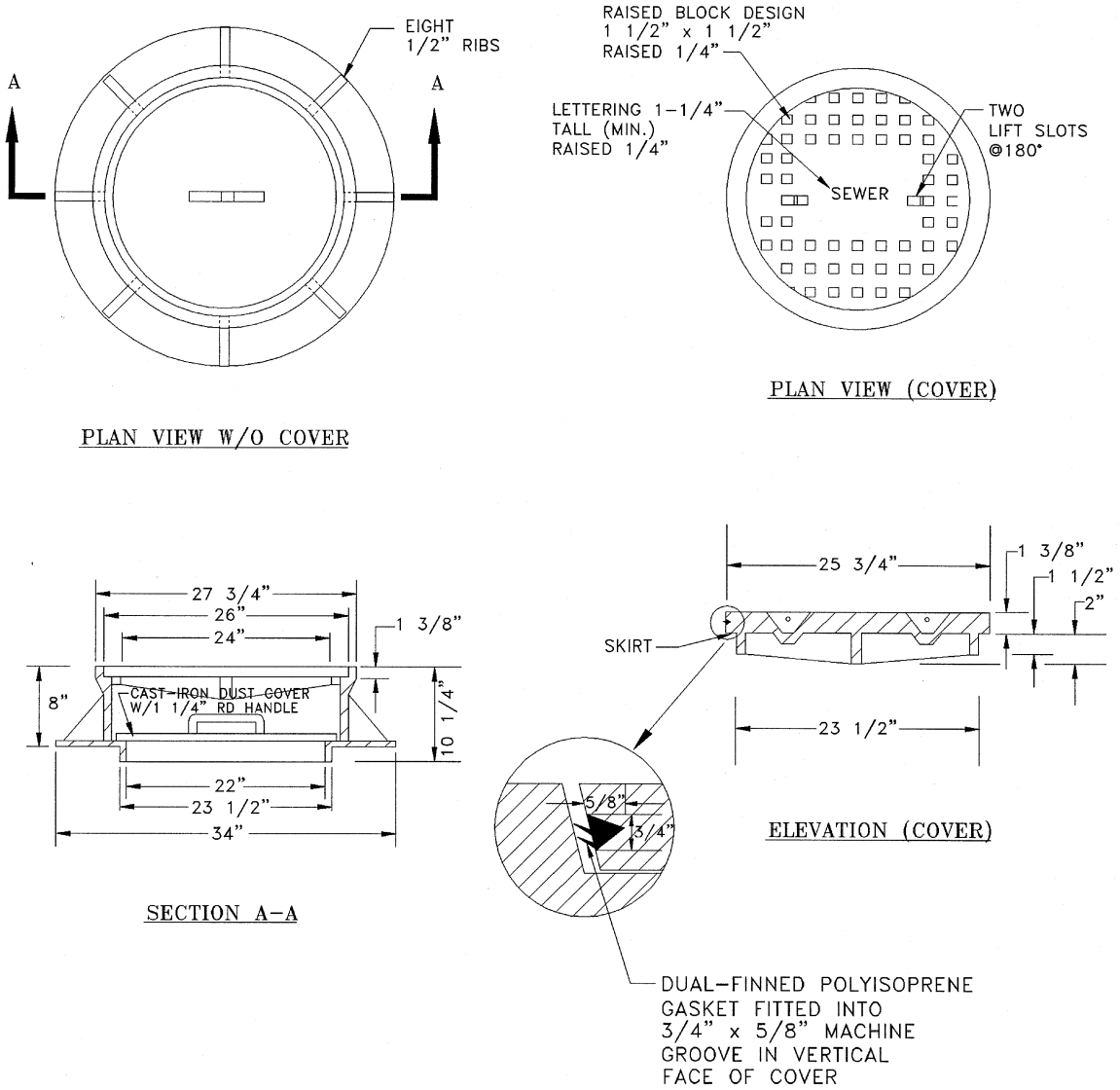

Approved August 1997

MOSTAFA A. SABBAH, Ph.D., P.E.
Director, Department of Engineering

MANHOLE
FRAME & COVER
(WATERTIGHT W/GASKET)

Plate 4224

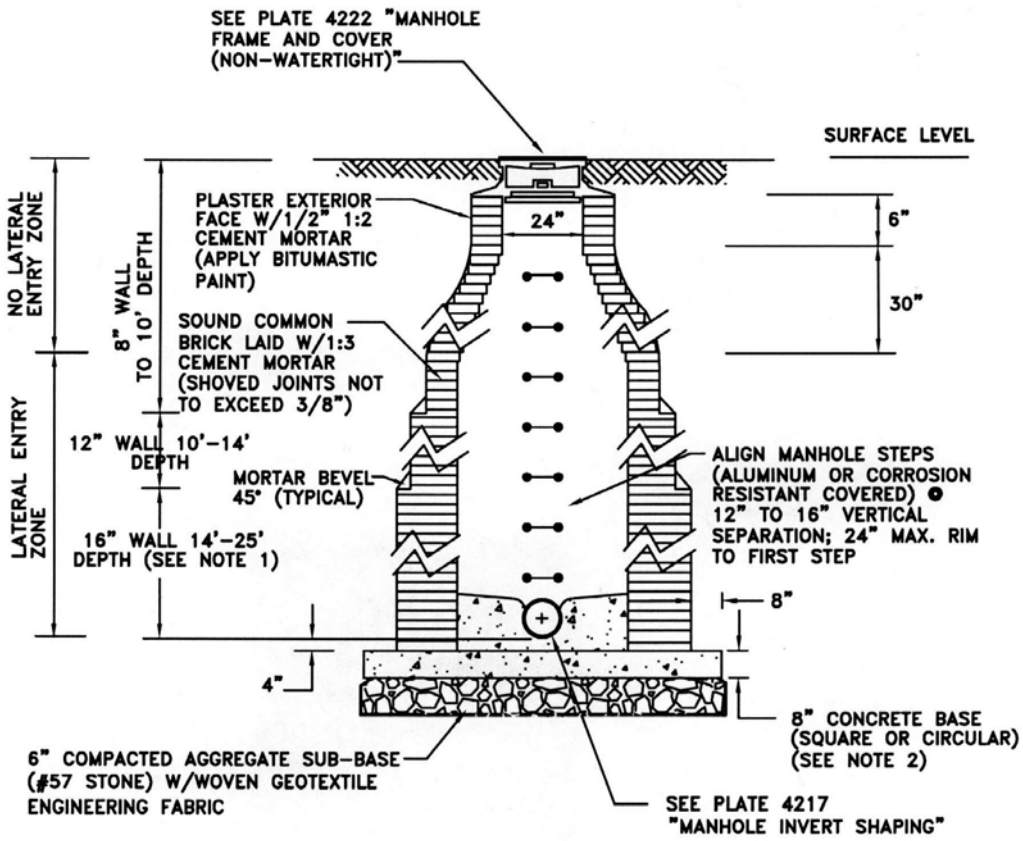

NOTES:

1. Structural analysis to be provided for brick manhole depth greater than 25' (rim to invert).
2. Concrete base to be constructed using Class A-4 concrete (4000 psi) using 60-66 wire fabric reinforcement for in-place construction or #4 rebar E.W. @ 12" O.C. for precast construction.
3. Sewer lines connected directly to a manhole or to short stubs integral with a manhole shall be made with flexible joints approved by the Director.

Approved Revised October 2002

MOSTAFA A. SABBAH, Ph.D., P.E.
Director, Department of Engineering

BRICK MANHOLE CROSS-SECTION

Plate 4225

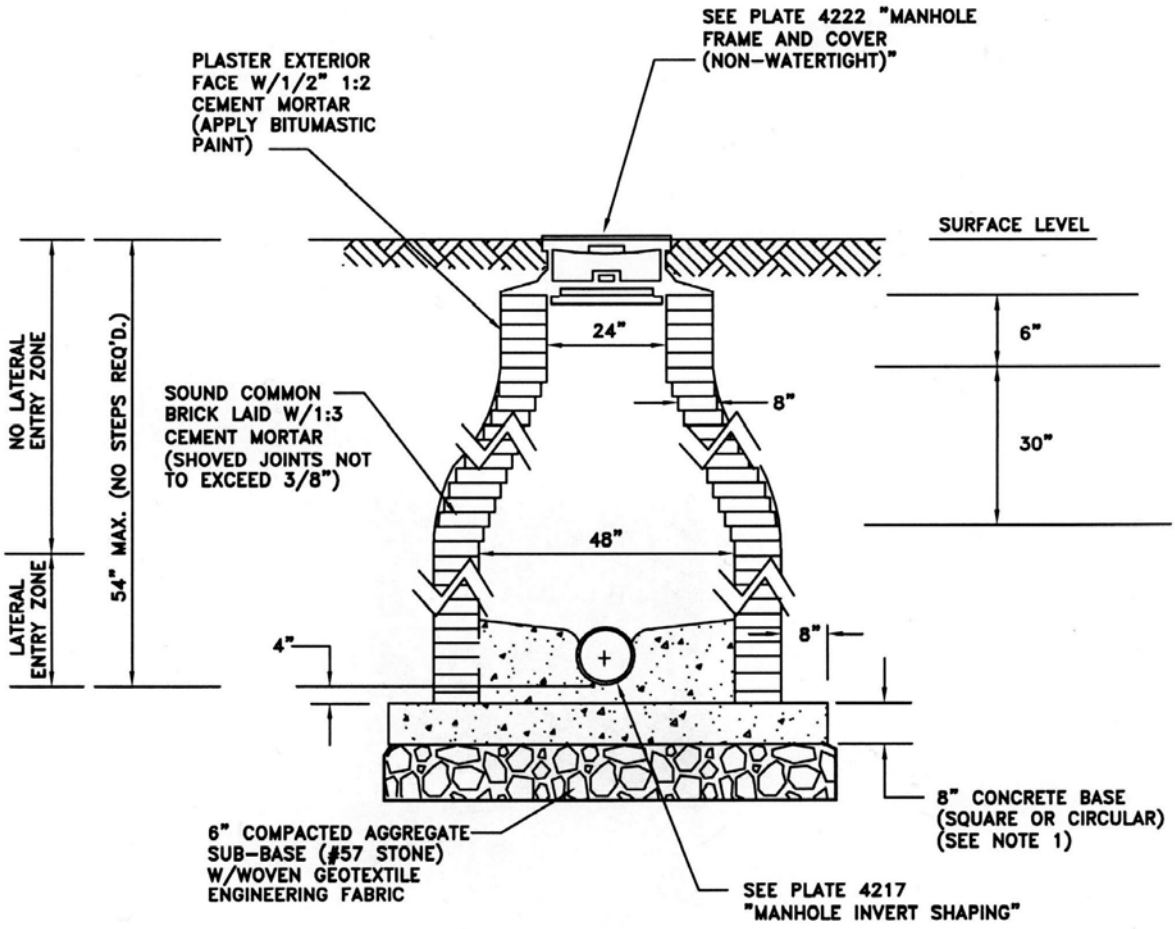

NOTES:

1. Concrete base to be constructed using Class A-4 concrete (4000 psi) using 60-66 wire fabric reinforcement for in-place construction or #4 rebar E.W. @ 12" O.C. for precast construction.
2. Sewer lines connected directly to a manhole or to short stubs intergral with a manhole shall be made with flexible joints approved by the Director.
3. Manholes less than 48" in depth require a special design to be approved by the Director.

Approved Revised October 2002

MOSTAFA A. SABBAH, Ph.D., P.E.
Director, Department of Engineering

SHALLOW BRICK MANHOLE

Plate 4226

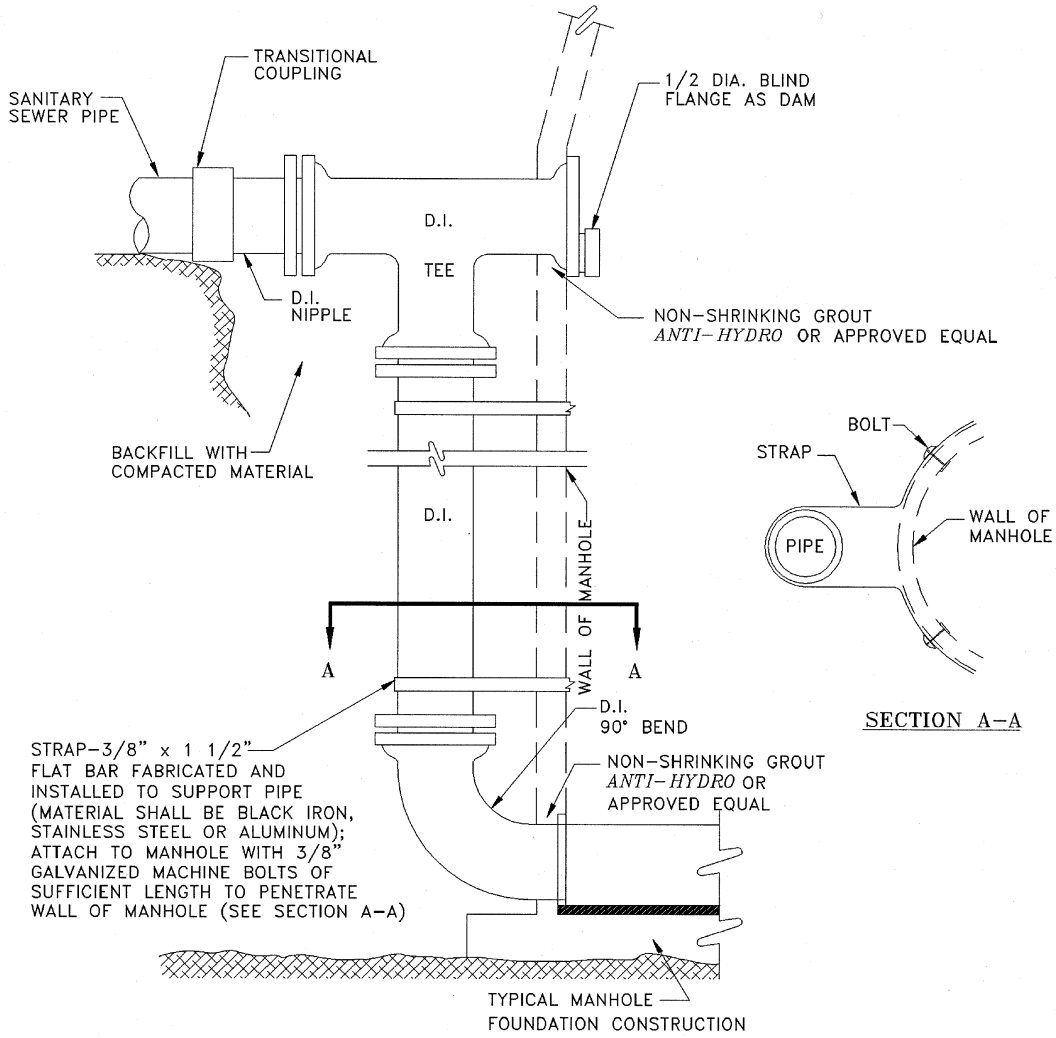

NOTES:

1. May be used for precast or cast-in-place manholes.
2. Reverse wye may be substituted for tee fitting.
3. Only ductile iron Class 52 to be used.
4. Minimum two straps (top and bottom) and one every four feet in between.

Approved August 1997

MOSTAFA A. SABBAH, Ph.D., P.E.
Director, Department of Engineering

EXTERNAL DROP CONNECTION

Plate 4227

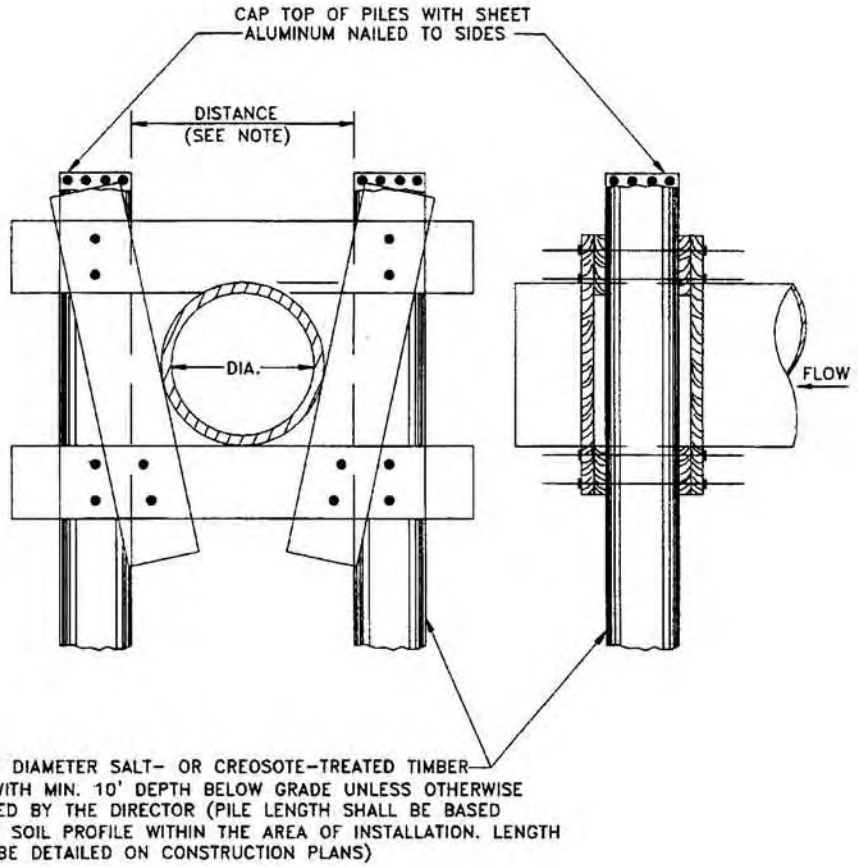

NOTE: All supporting members and bracings are to salt-treated or creosote-treated 2"x 10" lumber. All bolts are to be 3/4" galvanized steel with O.G. galvanized washers. Maximum width between piles shall be three pipe diameters.

Approved August 1997

MOSTAFA A. SABBAH, Ph.D., P.E.
Director, Department of Engineering

PILE BENT SUPPORT UNDER PIPE

Plate 4228

CHAPTER 3
PUMP STATIONS

3.0 GENERAL 3-1
3.0.1 Class I Reliability 3-1
3.0.2 Design Flow 3-2
3.1 STRUCTURES 3-2
3.1.1 Wet Wells 3-2
3.1.2 Pump Rooms 3-4
3.1.3 Motor Rooms 3-5
3.1.4 Miscellaneous Structural Requirements 3-6
3.2 EQUIPMENT 3-7
3.2.1 Pumps 3-7
3.2.2 Liquid Level Control Panel (required for all pump stations) 3-10
3.2.3 Standby Emergency Power Generator 3-13
3.2.4 Fuel Storage Tanks 3-15
3.2.5 Alarm Telemetry System 3-15
3.2.6 Electrical 3-16
3.2.7 Potable Water Service (required for all pump stations) 3-16
3.2.8 Piping 3-17
3.3 ENGINEERING DOCUMENTS 3-17
3.3.1 Plans 3-17
3.3.2 Specifications 3-19
3.3.3 Calculations 3-19
3.4 DESIGN STANDARD PLATES 3-19
3.5-3.99 (Reserved)

List of Illustrations for Chapter 3

TABLES
3-1 Painting Scheme 3-8
FIGURES
None
PLATES
4301 Typical Pump Station Design (Wet Well/Dry Well) 3-20
4302 Typical Pump Station Design (Suction Lift w/Generator) 3-21
4303 Typical Pump Station Design (Grinder/Submersible Pump) 3-22
4304 Air Relief Line Discharge Funnel 3-23

Chapter 3

PUMP STATIONS

3.0 GENERAL

Public sewage pump stations that are proposed to be constructed within the City of Newport News shall be designed in accordance with current City comprehensive Sewage Collection Management Program (SECOMP) documents, Chapter 22 of the current Commonwealth of Virginia Sewerage Regulations as promulgated by the Virginia Departments of Health and Environmental Quality, and local requirements as described in this chapter.

3.0.1 **Class I Reliability**. All sewage pump stations shall meet Class I Reliability as defined in the Commonwealth of Virginia Sewerage Regulations. Class I Reliability can be attained by one of the following:

a. The station wet well and collection system shall have the required storage capacity to prevent sewage overflows.

b. The station shall be provided with an emergency standby power generator to supply electric power for the station in the event of a power failure.

3.0.2 Design Flow. Design flows shall be based upon a population estimate for the area to be served by the pump station. Consideration shall be given to the degree of present and possible future development. The pump station shall be designed to accommodate peak flow rates. Peak flow rates are defined as being 2.5 times the design flow. Listed below are the various design flows that will be used for the design of sewage pump stations:

a. Single-family homes:

(1) Four persons/home.

(2) 100 gallons per day (G.P.D.)/person.

b. Apartments, townhouses and mobile homes:

(1) Three persons/unit.

(2) 100 G.P.D./person.

c. Design flows from developed and undeveloped commercial and industrial areas shall be based on a projection or evaluation of facilities in conjunction with Chapter 2 of this manual.

3.1 STRUCTURES

Pump station structures constructed in the City of Newport News shall generally comply with the typical model design shown in Plates 4301 through 4303, as appropriate for the type of pump station contemplated or as required by the Director. The models presented are general in nature and are not intended to be all-inclusive of pump station criteria required by this chapter.

3.1.1 Wet Wells:

a. The effective capacity of the wet well shall be such that one pump will run continuously at least five minutes of every 30-minute period at the minimum flow.

b. A bar screen (maximum clear opening of two and one-half inches) shall be provided for wet wells of non-grinding sewage pump stations.

c. Wet wells shall be mechanically ventilated as follows:

(1) Continuous ventilation -- 12 complete air exchanges per hour.

(2) Intermittent ventilation -- 30 complete air exchanges per hour.

d. Wet well interior and exterior walls shall be protected as follows:

(1) Interior walls shall be coated with two coats of high-build protective coating as approved by the Director.

(2) Exterior walls shall be painted with two coats of *Koppers 300-M* or equal.

(3) Applications and thicknesses shall be according to the manufacturer's recommendations or as required by the Director.

e. The influent sewer line shall be valved.

(1) Guide rods and sleeves shall be stainless steel.

(2) Valve body bolts shall be stainless steel.

(3) Valve disc to be bronze.

f. All interior metalwork shall be aluminum, stainless steel or other non-corrosive metal.

g. All electrical fixtures shall be installed in accordance with applicable codes.

(1) Junction boxes, fixtures and conduit shall be vapor- and explosion-proof.

(2) Electrical conduits used in wet wells shall meet NFPA and all applicable codes, shall be sealed on both ends, and shall be PVC-coated, galvanized steel.

h. Entry into the wet well shall be via ladders or stairs. Ladder runs shall not exceed eight feet without the use of intermediate landings or platforms.

i. Wet well bottom fillets shall have a minimum slope ratio of 1:1.

j. A gravity inlet air vent shall be required for the wet well. Size shall be equivalent in CFM to the exhaust fan.

k. The wet well shall be oriented to provide access for cleaning equipment. Access into the wet well shall accommodate the cleaning equipment.

l. Wet well access hatches shall not be located in front of other doors accessing the pump station.

m. Pump air relief lines and sump pump discharge lines shall conform to the HRSD Air Entrainment Mitigation Policy and shall discharge to a funnel as shown on Plate 4304.

n. Air bubble tubes are to be located next to ladders or platforms.

3.1.2 Pump Rooms:

a. The pump room shall be sized to provide sufficient space to maintain the facility.

b. Access and handling facilities shall be adequate for the removal and reinstallation of pumps.

c. A dry well installed below grade shall conform with the following:

(1) A sump with a sump pump shall be provided. Pump discharge is to be above wet well high-water elevation. Sump detail shall be provided. An aluminum grate shall cover the sump. A second sump pump with separate power source and discharge line shall be located on the pump room concrete slab.

(2) Access to the pump room shall be by stairs.

(3) Pumps shall be installed on raised concrete blocks. Blocks shall be notched to drain.

(4) Ground fault electric receptacles shall be installed for safety and adequately located in the pump room.

(5) Lights shall be accessible from either the bottom floor slab or from fixed ladders or stairs. Fluorescent lighting required.

(6) Motor and pump controls shall be on or above existing ground elevations.

(7) All interior piping shall be supported by pedestals or hangers and shall be blocked or braced for reactions.

(8) Dry well pump room shall be mechanically ventilated as follows:

(a) Continuous ventilation -- six complete air exchanges per hour.

(b) Intermittent ventilation -- 30 complete air exchanges per hour.

(9) A trough shall be located around the pump room floor slab, and the floor shall be sloped toward the trough.

(10) Safety pump cutoff switches shall be located adjacent to each pump. Identify switch with relevant pump number.

(11) Eye bolts shall be provided and conveniently located for pump removal.

(12) A flanged wall pipe shall be provided for pump suction.

(13) A platform and/or catwalk shall be provided for access to the pump drive shaft bearings and shaft support beam.

(14) A dehumidifier shall be required.

(15) High-water alarm float (dry well).

3.1.3 Motor Rooms:

a. The pump station motor room shall be located at or above station ground elevation.

b. The motor room building shall be constructed of brick and masonry blocks on a concrete slab, shall have no windows, and doors shall be sized to accommodate passage of all installed equipment. The building roof shall generally be of a wood truss design with plywood sheeting and asphalt shingles. Shingles shall be warranted for 20 years.

c. Motors shall be adequately secured to the floor slab in accordance with the manufacturer's recommendations unless the Director concludes that safety considerations warrant stricter requirements.

d. Electric wiring shall be in accordance with applicable codes.

e. All motors shall be three-phase, 60-cycle.

f. Provide 5kW electric heater with thermostat.

3.1.4 Miscellaneous Structural Requirements:

a. PVC ductwork shall be provided for vent fans. Wet well vent fan ductwork is not to be located in the pump motor room.

b. Vandal-proof outside lighting shall be provided (*Manville* # WL2K-15AHP-12-PR-WG or equal) with photo control kit and wire screen.

c. All hatch covers shall be aluminum and contain latches and hasps for padlocking.

d. Handholds shall be installed at each access hatch. Details of the handholds shall be shown on plans.

e. Vent fan stacks shall be in a chimney constructed of material compatible with pump station structure.

f. PVC pipe shall be *Schedule 80*. Pipe hangers shall be provided to support all pipes.

g. Edges on concrete shall be chamfered.

h. Watersteps and keyways shall be provided at all joints.

i. A bypass connection shall be provided.

j. All access hatches shall be aluminum *Bilco, Halliday, U.S. Electric*, or equal. Provide latches and hasps for padlocking.

k. If required by the Director, a pump removal and handling system shall be provided for wet well- and/or dry well-configured stations. If the system is required, an I-beam with a trolley shall be provided, shall be located in the station roof and shall be directed to the station door.

l. Station piping, equipment and other metal finishes shall be painted in accordance with City standard color codes shown in Table 3-1.

m. Wood used on stations shall be salt-treated in the concentration of 2.5#/ft^3. Vinyl siding required for exterior wood.

n. A PA system shall be required for separate pump and control rooms.

o. An A-frame wood roof is required (trusses 16" on centers). Shingles shall be warranted for 20 years.

p. Station building walls shall be brick and block construction.

q. A davit base and hoist shall be located at the wet well hatch. Equipment shall be DB Industries Salalift 1 1850 D-60S winch or equal, davit arm and davit base with 60 feet of stainless steel cable. Davit base is to be located at the wet well access hatch and mounted in accordance with manufacturer's recommendations.

3.2 EQUIPMENT

3.2.1 Pumps:

a. Each station shall contain a minimum of two pumps, each capable of pumping the design peak flow.

b. Pumps shall be designed for the pumping of sanitary sewage.

c. Pumps shall be sized to pass a three-inch solid (except grinder-style pumps).

Table 3-1

PAINTING SCHEME

ITEM	COLOR
Electrical	Red (paint all outside Brown)
Pumps	Green
Wastewater Pipe	Green
Water Pipe	Light Blue
Pump Shafts	Safety Orange
Steps	Silver
Vent Fans and Covers	Silver
Bird Screens	Silver
Hatches	Green (or leave aluminum ones unpainted)
Doors	Dark Brown (Exterior Rustic)
First Step and Around Perimeter of Hatches	Safety Orange
Bypass Stands	Green (Plug: Silver)
Fuel Lines	Yellow
Floor	Polyurethane (Floor Enamel Gray)

d. Acceptable types are as follows:

(1) Wet Well/Dry Well (see Plate 4301).

(2) Suction Lift (see Plate 4302).

(3) Grinder Pump (see Plate 4303).

e. Pump volutes shall be vented to the wet well as follows:

(1) Discharge shall be above the high-water elevation and into an air relief line discharge funnel that includes a line extending below the low-water elevation (see Plate 4304).

(2) An air release valve shall be installed on all suction lift pumps.

(3) Air relief line shall be brass, up to and including check valve.

f. When connecting directly into the Hampton Roads Sanitation District (HRSD) force main system, both minimum and maximum HRSD pressures shall be considered in the pump selection.

g. The number, corresponding with the designated switches on the control panel, shall be painted on pumps and motors.

h. Shafts shall be adequately braced.

i. Additional support shall be provided for long shafts. Refer to the manufacturer's technical design information for bracing requirements. The manufacturer shall certify the adequacy of the shafts.

j. Taps and pressure gauges shall be provided for each pump. Nipple and petcock shall be brass.

k. Shaft guards shall be provided for each pump shaft. Guard shall extend at least eight feet above the floor elevation.

l. Stainless steel guide-rails shall be provided for grinder pump removal and handling.

m. Concrete pump pedestals shall be notched to drain.

n. Sewage pump equipment items are to be reviewed by the Newport News Product Review Committee and must be approved by the Director prior to use.

o. There shall be three feet, as a minimum, of working space around each pump.

p. A vibration switch will be provided for pumps with 50 HP or greater pump motors to shut down pumps with excessive vibration.

q. One complete set of pump manufacturer's recommended spare parts, including lantern rings, shaft sleeves, packing gland, and pump impeller. Two sets of repair manuals.

3.2.2 Liquid Level Control Panel (required for all pump stations):

a. Liquid level control panels shall be designed but not limited to providing the following features:

(1) All panels used in sewage pump stations shall be supplied from manufacturers approved by the Director.

(2) Panel components and material will conform with the latest City of Newport News requirements.

(3) Controls and motor starters shall be located in a single enclosure.

(4) Liquid level sensor shall be either the air bubbler type or the mercury float type.

(5) One main service breaker shall be provided.

(6) One breaker and one motor starter shall be provided for each pump motor.

(7) Provisions shall be made for pump lead, lag, and alternation.

(8) Panel must provide under-voltage protection with three-phase sensors for each pump individually.

(9) Panel must be equipped for automatic shut-down of individual pumps during failure-to-pump conditions.

(10) Panel must include programmable logic controller with *EPROM* program or equal to perform all pump control logic as required by the Director.

(11) Panel must be equipped with duplex air pumps for liquid level control.

(12) Panel doors shall not conflict with other station equipment. Maintain three feet of working space around the control panel.

b. The panel enclosure shall be wall- or floor-mounted and manufactured to *UL* standards. The enclosure shall be *NEMA 12* or equal in design. The interior shall be finished (White in color) and the exterior finished with polyurethane paint (Vista Green in color).

c. The following items shall be located on the door of the panel enclosure:

(1) Operators for the main service and pump motor circuit breakers. Panel breakers shall be interlocked, with flange operators interlocked with the panel door.

(2) Branch circuit breakers for panel enclosure, lights, receptacles, alarm transmitter, etc.

(3) White control “On” pilot light.

(4) Wet well water level indicator/controller to be *Murphy Gauge OPL* series or equal with tickler.

(5) Pump running ammeter for each pump.

(6) Pump running time meter for each pump.

(7) One hand/off/auto switch for each pump.

(8) Overload reset buttons and lights, one for each pump.

(9) Pump selector switch.

(10) Bubbler air flow control.

(11) Pump running lights for each pump.

(12) Air pump selector switch.

(13) Failure light for each air pump.

(14) Air system purge quick disconnect.

(15) Seal failure light for each pump (grinder pumps).

(16) Alarm system test function.

(17) Engraved nameplates for enclosure-mounted items.

d. The following items are to be mounted in the interior of the panel enclosure:

(1) Circuit breakers for main service and pump motor disconnects. Breakers to be of adequate size for service, voltage rating, short-circuit capacity, etc. in accordance with NEC requirements.

(2) Motor starter for each pump. Starters to be of adequate size and voltage rating to start motors and shall have properly sized overhead heating elements and overload relays installed in all three phases.

(3) An adjustable voltage sensor.

(4) A lightning surge protection device.

(5) A failure-to-pump relay for each pump.

(6) A programmable logic controller in accordance with City of Newport News requirements in effect at the time the pump station is designed or as required by the Director.

(7) Alarm contacts wired to a separate terminal strip. Alarm test function with backup power supply.

(8) Terminal strips for field control wiring.

(9) Duplex air compressor for liquid level control bubbler system, with manual purge.

(10) Bulkhead fittings for air supply and bubbler tubes.

(11) A 15W fluorescent light fixture.

3.2.3 Standby Emergency Power Generator:

a. Generator sets shall be diesel and shall be sized for future pump station operating conditions.

b. Air louvers shall be sized to suit generators and shall contain a metal bird screen.

c. Power transfer switches shall be located in a separate cabinet.

d. A disconnect shall be located between the liquid level control panel and the generator, and between the transfer switch and incoming electric service.

e. A generator set water jacket heater with a factory thermostat shall be provided.

f. Buried fuel tanks are not permitted. Fuel tanks shall be above ground, with fuel containment provisions as part of the tank installation. A fuel filter shall be provided.

g. An anti-siphon device shall be provided on the fuel line of generator sets with an above-ground fuel tank.

h. Generator set fuel system shall contain a fuel level gauge for the fuel tank.

i. Power:

(1) Automatic power transfer switches and controls to sense power failure and generator running and to transfer station to an emergency power source.

(2) This system to incorporate a trickle charger for the generator starting battery.

j. The generator system exhaust pipe that is located within the building shall be adequately insulated with approved material. Exhaust pipe and/or mufflers installed within one and one-half feet of a wooden surface shall also be insulated.

(1) Exhaust shall not be located next to inlet louvers.

(2) Exhaust shall not be directed toward any adjacent residences.

(3) Provide rain cap.

k. Adequate working space (a minimum of three feet) shall be provided around the generator.

l. Verify the station door is adequate to accommodate passage of the generator.

m. Vibration isolators shall be provided for generator sets.

n. A lubricant drip pan shall be located under the generator.

o. Generators to meet or exceed performance characteristics of those manufactured by Onan or Caterpillar, or others as approved by the Director.

p. Generators shall be provided with a minimum five-year warranty. Warranties shall include the transfer switch.

q. Spare voltage regulator and fault board shall be provided with all new generators.

r. Exercise clocks shall be capable of selecting up to a 14-day exercise period with a 24-hour time selection.

s. Generator alarm to be connected such that alarm is energized regardless of transfer switch position.

t. Generator-on exercise light is required on transfer switch panels.

u. An approved canopy and adequate lighting are required for outdoor generators.

v. Generators shall start on failure of any phase power loss.

3.2.4 Fuel Storage Tanks:

a. Day tanks shall be located on the plans if required.

b. Anti-siphon devices are required on the fuel lines.

c. Contractors shall provide fuel for the testing of the generator and shall completely fill the tank prior to acceptance.

d. Above-ground storage tanks are required.

e. Skid-mounted fuel tanks are required for generators 50kW and less in size.

f. All new tanks must be factory tested for tightness using standard engineering practices. A certificate of this test shall be provided to the Director.

g. All storage tanks shall meet the requirements of Commonwealth of Virginia Department of Environmental Quality (DEQ) Regulation VR 680-14-12.

3.2.5 Alarm Telemetry System:

a. Alarm transmitters to be Motorola (Model MRU Plus) advanced alarm status units or equal.

b. Location and height of antennae must be sufficient to ensure that the alarm system signal will be received at the Newport News Operations Center.

c. Door alarm shall be provided for all doors.

d. Limit switches shall be provided for each discharge check valve.

e. Alarm transmitters shall be provided and shown on the plans.

f. The following alarm contacts shall be provided and wired to a separate terminal strip:

(1) High water.

(2) Pump #1 failure to start.

(3) Pump #2 failure to start.

(4) Power failure.

(5) Air pump failure (or pump failure).

(6) Station on an emergency generator (where applicable).

(7) Door monitors for each door.

(8) Generator failure to start, where applicable (or air pump failure).

3.2.6 Electrical:

a. Three-phase, underground service shall be provided.

b. Service availability shall be coordinated with the power provider.

c. Peak/Off-peak power meters shall be provided and shall be shown on plans.

d. Exterior lighting shall be individually switched.

e. Locate lighting on each side of station building.

f. PVC-coated rigid conduit shall be used in the wet well.

g. Ground fault outlets shall be required on each side of the building interior and exterior.

h. Below-ground pump room lighting shall be wall-mounted and accessible.

3.2.7 Potable Water Service (required for all pump stations):

a. Water meter location shall be indicated on the site plan.

b. The location of the back-flow preventer within the station, along with hose bibs at convenient locations, shall be indicated on the site plan.

c. No portion of the water service shall be located within the station wet well.

d. One-inch water service is required.

3.2.8 Piping:

a. All interior piping that is four inches or larger shall be ductile iron, bituminous lined, Class 150. Joints shall be flanged within the station.

b. Allowable velocities:

(1) Suction Pipe: 2.0 to 5.0 ft/sec (self-priming pump suction velocity may exceed 5.0 ft/sec.).

(2) Discharge pipe (force main): 2.0 to 9.0 ft/sec.

c. An emergency station bypass connection shall be provided on the discharge line (see Chapter 2 of this manual).

d. A gate valve and a check valve shall be provided on the discharge side of each pump.

e. A gate valve shall be provided on the suction line of flooded suction pumps.

3.3 ENGINEERING DOCUMENTS

Sewage pump stations constructed within the City of Newport News shall have the station plans and specifications reviewed and approved by the Director prior to construction. Should it be necessary, these documents shall be reviewed by the State Health Department and State Water Control Board for compliance with State regulations. In those cases, the pump station owner shall furnish the Director with an additional five complete sets of contract documents for forwarding to the various State agencies.

3.3.1 Plans. All pump station plan sets shall contain the following:

a. A title sheet with the following information:

(1) Project name or designation.

(2) Sheet index.

(3) Project vicinity map.

(4) Project service area.

(5) Identification of the project owner.

(6) Professional Engineer's seal.

b. A site plan, including but not limited to the following:

(1) North Arrow.

(2) Benchmark.

(3) Locations for existing utilities.

(4) Locations of all easements.

(5) Adequate scale.

(6) Erosion control measures.

(7) Existing and final topography.

(8) Pump station planting.

(9) Pump station fence (salt-treated privacy fence).

(10) Site drainage.

(11) 100-Year flood elevation notation.

(12) Station driveway.

(13) Station landscaping.

(14) Any special features related to the station.

c. Construction plans and details shall be clearly and neatly drawn with proper identifications, dimensions, materials and other information necessary to ensure the desired construction.

3.3.2 Specifications. Typical specifications must first be approved by the Director and contain technical data on the following:

a. Proposed pump station equipment.

b. Proposed construction.

3.3.3 Calculations. All engineering calculations used for the design of the pump station shall be submitted, with other pertinent engineering data and required documents, to the Director and shall include but not be limited to:

a. Project flow rate.

b. Pump station system curves.

c. Pump performance curves.

d. Pump operating point.

e. Written confirmation of HRSD head conditions, if applicable.

3.4 DESIGN STANDARD PLATES

Design standard plates for this chapter are:

Number	Title
4301	Typical Pump Station (Wet Well/Dry Well)
4302	Typical Pump Station (Suction Lift w/Generator)
4303	Typical Pump Station (Grinder/Submersible Pump)
4304	Air Relief Line Discharge Funnel

(Sections 3.5 through 3.99 are reserved. Section 4.0 is next.)

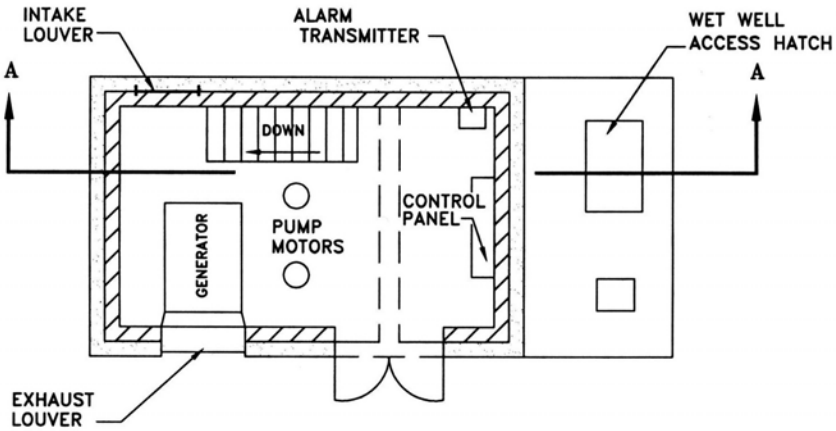

PLAN VIEW

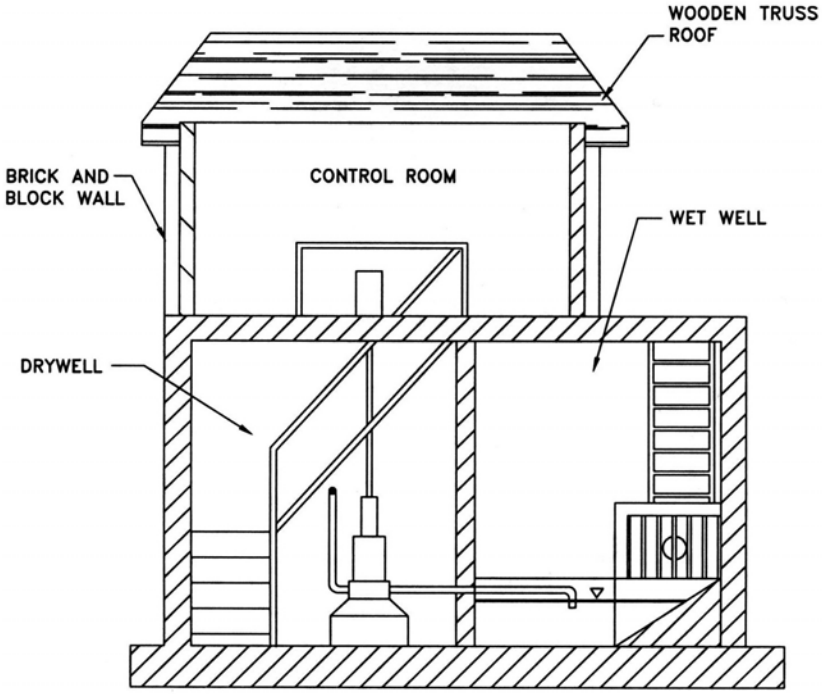

SECTION A–A

Approved Revised March 2002

MOSTAFA A. SABBAH, Ph.D., P.E.
Director, Department of Engineering

TYPICAL PUMP STATION DESIGN
(WET WELL/DRY WELL)

Plate 4301

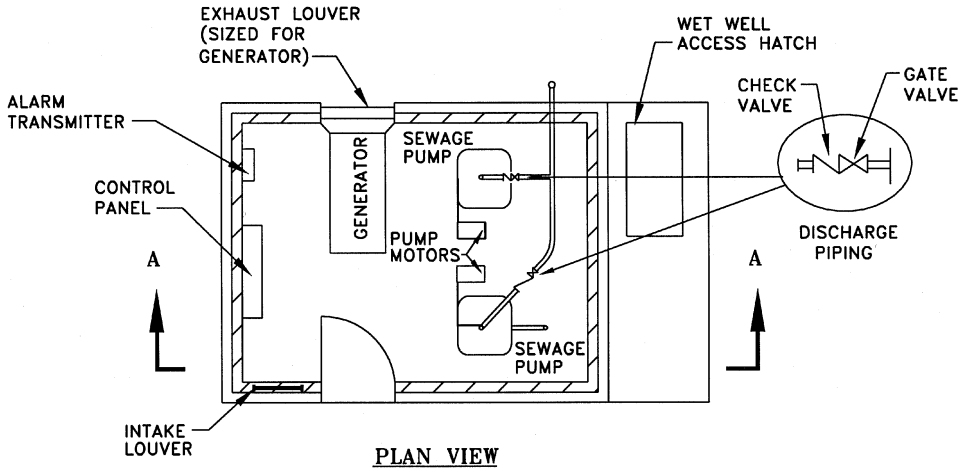

PLAN VIEW

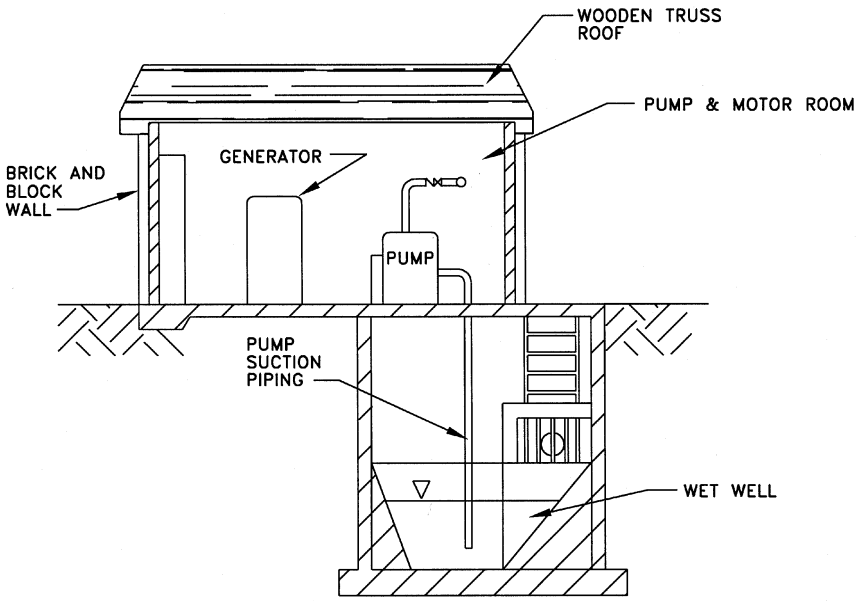

SECTION A–A

Approved August 1997

MOSTAFA A. SABBAH, Ph.D., P.E.
Director, Department of Engineering

TYPICAL PUMP STATION DESIGN
(SUCTION LIFT
W/GENERATOR)

Plate 4302

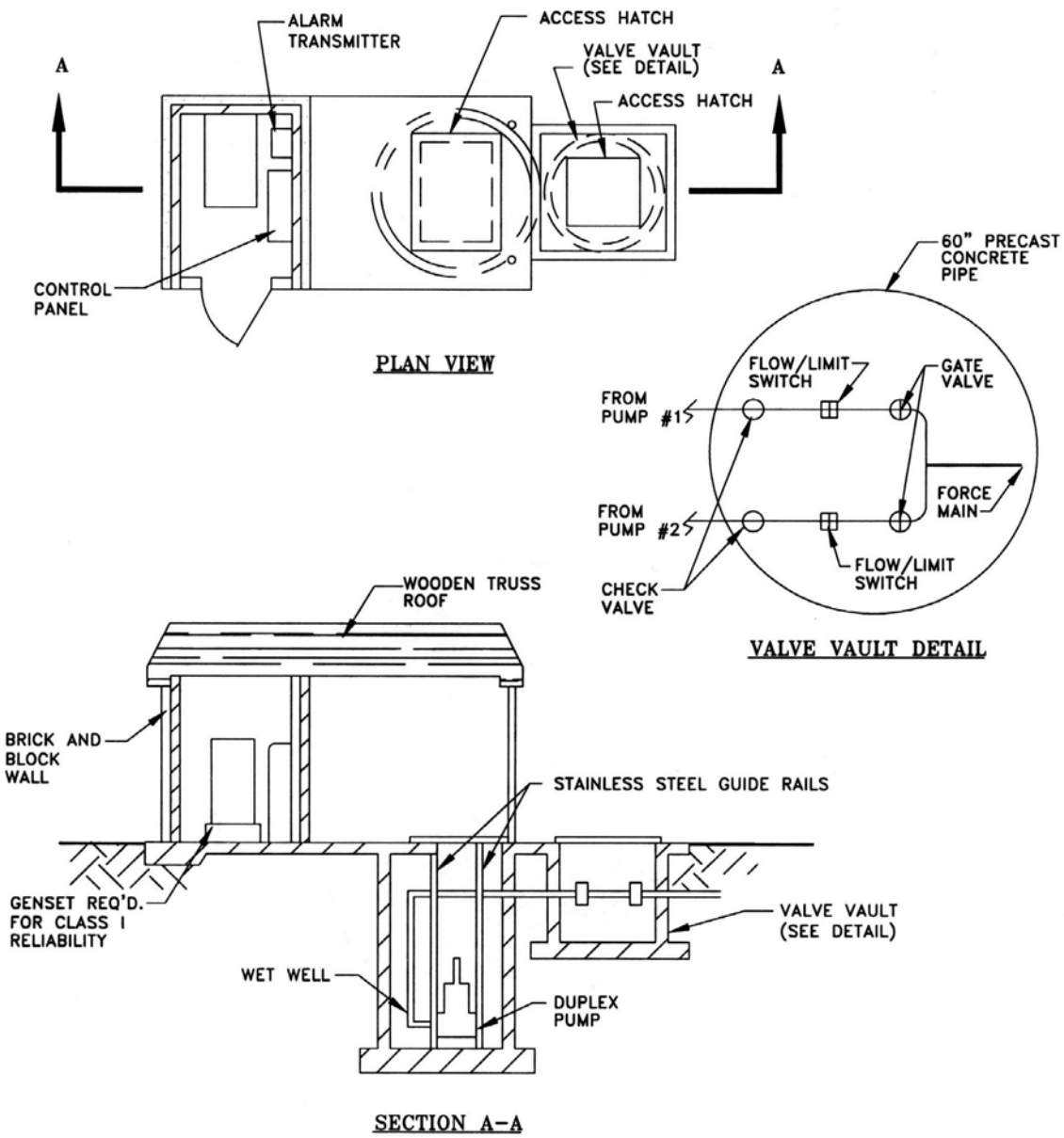

Approved Revised March 2002

MOSTAFA A. SABBAH, Ph.D., P.E.
Director, Department of Engineering

TYPICAL PUMP STATION DESIGN
(GRINDER/ SUBMERSIBLE PUMP)
Plate 4303

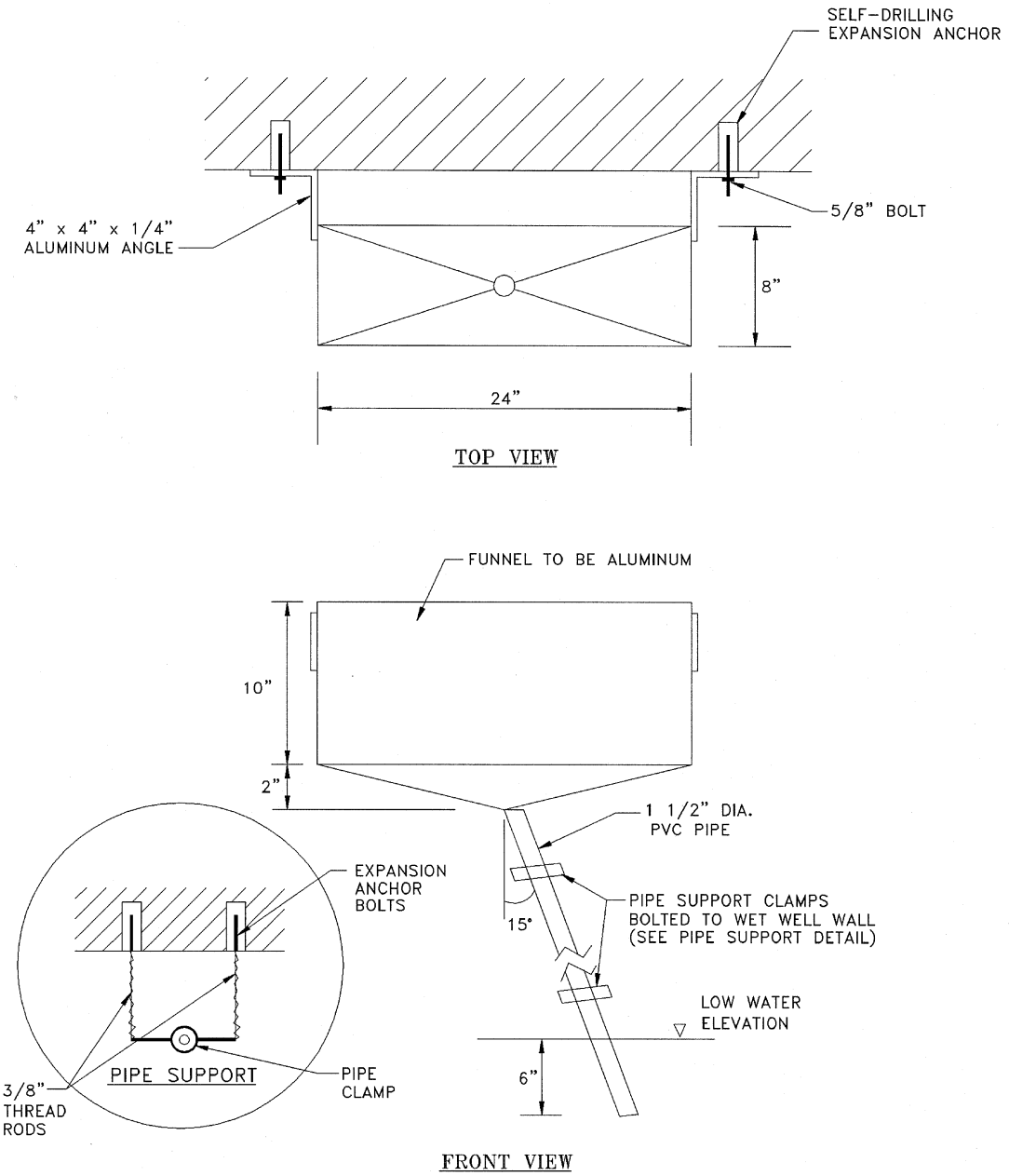

NOTE: All bolts, clamps, bracings, etc. shall be stainless steel or aluminum.

Approved August 1997

MOSTAFA A. SABBAH, Ph.D., P.E.
Director, Department of Engineering

AIR RELIEF LINE DISCHARGE FUNNEL

Plate 4304

CHAPTER 4
STREETS

4.0 GENERAL 4-1
4.0.1 Responsibility 4-1
4.0.2 Methods 4-2
4.1 SOILS EVALUATION 4-2
4.1.1 Sampling 4-2
4.1.2 Boring 4-3
4.1.3 Classification 4-3
4.1.4 Report 4-3
4.2 PAVEMENT SECTION DESIGN 4-4
4.2.1 Design CBR 4-4
4.2.2 Other Design Options 4-4
4.2.3 Design Period 4-7
4.2.4 Plans 4-7
4.2.5 Traffic 4-7
4.2.6 Narrative 4-7
4.2.7 Alternatives/Recommendation 4-7
4.3 CONSTRUCTION 4-7
4.3.1 Utilities 4-7
4.3.2 Drainage 4-7
4.3.3 Proof-rolling 4-7
4.3.4 Compaction 4-8
4.3.5 Final Asphalt Surface 4-8
4.4 ROADWAY DESIGN FACTORS 4-8
4.4.1 Intersection Sight Distance 4-8
4.4.2 Intersection and Crossover Spacing 4-8
4.4.3 L-Intersection 4-10
4.4.4 Curb & Gutter and Median Curb 4-10
4.4.5 Minimum Centerline Street Radii 4-10
4.4.6 Guardrail 4-10
4.4.7 Right-of-way Monuments 4-10
4.4.8 Cul-de-sacs 4-10
4.4.9 Driveway Aprons 4-11
4.4.10 Entrances 4-11
4.4.11 Sidewalks and Bikepaths 4-13
4.4.12 Handicap Parking 4-14
4.4.13 Streetlight Poles and Luminaires 4-14
4.4.14 Private Street 4-15
4.5 DEAD-END STREET TREATMENTS 4-15
4.5.1 Barricades 4-15
4.5.2 Object Markers 4-15
4.6 TRAFFIC CONTROL 4-16
4.6.1 Applicability 4-16
4.6.2 Traffic Control Easement 4-17
4.7 DRIVEWAY ACCESS 4-17
4.7.1 Policy Established 4-17
4.7.2 Supplementary Design Aids 4-17
4.8 DESIGN STANDARD PLATES 4-19
4.9-4.99 (Reserved)

List of Illustrations for Chapter 4

TABLES

4-1 Minimum Street Parameters 4-5
4-2 Minimum Residential Street Sections (in inches) 4-6
4-3 Sight Distance along Major Road at Intersection with Minor Road, Crossover, and Commercial Entrance 4-9
4-4 Intersection Spacing 4-9
4-5 Non-Residential Driveway Spacing per Public Street Frontage 4-18

FIGURES

None

APPENDICES

1 Driveway Access Policy 4-21

PLATES

4401 Major Arterial Street Section (Minimum 70' Right-of-Way; Undivided Roadway--12' Travel Lanes) 4-25
4402 Major Arterial Street Section (Minimum 80' Right-of-Way; Divided Roadway--11' Travel Lanes) 4-26
4403 Major Arterial Street Section (Minimum 90' Right-of-Way; Federal Standard; Divided Roadway--12' Travel Lanes) 4-27
4404 Major Arterial Street Section (Minimum 110' Right-of-Way; Divided Roadway--11' Travel Lanes) 4-28
4405 Major Arterial Street Section (Minimum 110' Right-of-Way; Divided Roadway--12' Travel Lanes) 4-29
4406 Collector Street Section (60' Right-of-Way) 4-30
4407 Minor Arterial Street Section (70' Right-of-Way; Undivided Roadway--11' Travel Lanes) 4-31
4408 Residential Street Section (40' & 50' Rights-of-Way) 4-32
4409 Private Street Section 4-33
4410 6" Combination Curb & Gutter and Median Curb 4-34
4411 4" Combination Curb & Gutter and Median Curb 4-35
4412 Street Centerline Radii 4-36
4413 Right-of-Way Monuments 4-37
4414 Residential Cul-de-sac 4-38
4415 Residential Cul-de-sac w/Future Extension 4-39
4416 Commercial Cul-de-sac 4-40
4417 Commercial Entrance (CG-10A-NN) 4-41
4418 Commercial Entrance (CG-13-NN) 4-42
4419 Commercial Entrance (VDOT CG-9D) 4-43
4420 Commercial Entrance Taper 4-44
4421 Residential Concrete Entrance (Streets w/Curb & Gutter) 4-45
4422 Residential Concrete Entrance (Streets w/o Curb & Gutter) 4-46
4423 Residential Asphalt Entrance (Streets w/o Curb & Gutter) 4-47
4424 H/C Curb Ramp (Perpendicular; Non-Parkway) 4-48
4425 H/C Curb Ramp (Parallel; Non-Parkway) 4-49
4426 H/C Curb Ramp (Parkway Setback) 4-50
4427 Sidewalk (Cross-section) 4-51
4428 Bikepath 4-52
4429 Combination Sidewalk/Bikepath (One-Way Design; Both Sides of Street) 4-53
4430 Combination Sidewalk/Bikepath (Two-Way Design; One Side of Street) 4-54
4431 Accessible Parallel On-Street Parking Spaces 4-55
4432 Typical Handicap Parking Space 4-56
4433 Accessible Van Handicap Parking Space 4-57
4434 Dead-End Street Treatments 4-58

Chapter 4

STREETS

4.0GENERAL

Street designs shall be accomplished under the supervision of a licensed professional engineer or certified land surveyor having demonstrated extensive street design experience. Public and private streets shall be designed according to criteria described in this manual, the Newport News *Standard Specifications*, applicable City ordinances, policies and regulations, and Virginia Department of Transportation (VDOT) *Road and Bridge Standards*. Criteria established in this chapter represent the minimum standards in normal situations, and the designer is responsible for determining if special site conditions require the use of materials and methods that are over and above those established. All items related to street designs, except those for City construction projects, shall be submitted through the site/subdivision plan review process to the Director for review and must be approved prior to approval of the final plan.

4.0.1 Responsibility. The designer should understand that successful design and construction of a street is dependent upon the evaluation of many parameters and that the final responsibility for the success or failure of a street lies with the designer. The following basic design considerations shall be evaluated, along with other considerations for individual situations, as part of the street design process:

- Water table elevation and variation impacts.

- Existing and anticipated future traffic volumes and loading.
- Weather conditions anticipated at the time of construction.
- Soils conditions at and below the proposed road subgrade elevation.
- Topographic variation.

4.0.2 Methods. The designer shall develop street designs based on commonly accepted design methods but not less than criteria identified in this chapter after evaluating existing soils conditions and anticipated traffic volumes projected for a minimum pavement design period of 20 years. Each street design shall contain a geotechnical soils evaluation report and a pavement section design with appropriate exhibits and calculations justifying design recommendations.

4.1SOILS EVALUATION

Each street design shall be accompanied by a comprehensive, site-specific soils evaluation report conducted by a certified soils testing laboratory and stamped by a professional engineer.

4.1.1 Sampling. The geotechnical engineer shall determine, consistent with sound engineering techniques, the appropriate number and location of soils samples to be collected and analyzed. The location of all sampling sites shall be shown on the plan. Maximum spacing for samples shall be no more than 300 feet along the centerline of all proposed roads, including widening projects, with a minimum of two samples required for any one street. The Director may require additional soils data during the design or construction phase of a project if he deems that the data submitted are insufficient to support necessary construction decisions. The soils evaluation report shall include the following data for each sample location:

a. Particle size analysis, consistent with *ASTM D 422 Standard Method for Particle-Size Analysis of Soils*.

b. Liquid limit, plastic limit and plasticity index, consistent with *ASTM D 4318 Standard Test Method for Liquid Limit, Plastic Limit, and Plasticity Index of Soils*.

c. California Bearing Ratio (CBR) tests, consistent with *ASTM D 1883 Standard Test Method for Bearing Ratio of Laboratory-Compacted Soils*. Soaked, unsoaked and percent swell tests shall be performed for each sample location, and the values obtained shall be shown on the plan. Samples shall be taken at proposed subgrade.

d. Moisture-density relations of soils, consistent with *ASTM D 1557 Standard Test Methods for Moisture-Density Relations of Soils and Soil-Aggregate Mixtures Using 10 lb. (4.54 kg.) Rammer and 18 in. (457 mm.) Drop*.

4.1.2 Boring. A soil boring, which is consistent with *ASTM D 420 Standard Recommended Practice for Investigating and Sampling Soil and Rock for Engineering Purposes*, shall be required at each sampling location. Logs shall contain blow counts, identify ground/water table elevations, and indicate the classification and description of each soil layer. This information shall be shown on the plan. Bores shall extend to a minimum depth of three feet below the deepest utility or a minimum of five feet below proposed subgrade where no utility is proposed.

4.1.3 Classification. Soils shall be classified consistent with *ASTM D 2488 Standard Practice for Description and Identification of Soils (Visual-Manual Procedure)*. The Director may require that classification of soils shall be consistent with *ASTM D 2487 Standard Test Method for Classification of Soils for Engineering Purposes* when he deems more stringent testing is warranted to ensure adequate construction. The basis for classification (either visual-manual procedures or laboratory test methods) shall be clearly stated in reports provided to the Director.

4.1.4 Report. The soils evaluation report shall include a summary of soils investigation results along with recommendations for dealing with special soils conditions encountered on the project. The report shall detail by narrative discussion special conditions or unusual soils features identified by the soils investigation. The purpose of the discussion is to highlight for the designer those soils conditions that may impact upon the pavement section design recommendations.

4.2PAVEMENT SECTION DESIGN

Table 4-1 consolidates public right-of-way requirements and street width alternatives and refers to specific plates that detail pavement section design minimums. Requirements in chapter six of this manual and in City Site and Subdivision ordinances also apply. Pavement section design shall accommodate four classifications of streets: major arterial, feeder, residential, and private. Rigid pavements shall be acceptable only with the approval of the Director; however the Director may require rigid pavements when deemed necessary to achieve adequate construction. The designer shall provide to the Director two copies of all graphs, tables, charts and calculations, in neat, legible and easy-to-follow order, used to estimate traffic and calculate proposed pavement sections.

4.2.1 Design CBR. Along with the other factors explained in this chapter, the designer shall develop pavement section designs based on a design CBR value of two-thirds the actual average soaked CBR values obtained from the sampling locations. After the subgrade has been evaluated and the design CBR determined, the minimum standard pavement section or its equivalent can be obtained from Table 4-2, which provides information to use in recommending pavement sections for residential streets. For other streets, the designer is referred to the appropriate plates provided with this chapter. The following documents may also be used as references for the development of pavement section designs:

a. *Thickness Design - Asphalt Pavements for Highways & Streets* (Asphalt Institute).

b. *Interim Guide for Design of Pavement Structures* (American Association of State Highway and Transportation Officials).

c. *Flexible Pavement Design Guide for Primary and Interstate Roads in Virginia* (VDOT and Virginia Transportation Research Council (VTRC)).

d. *Pavement Design Guide for Subdivision and Secondary Roads in Virginia* (VDOT and VTRC).

4.2.2 Other Design Options. The designer may use other industry-established pavement design methods with the prior approval of the Director.

Table 4-1

MINIMUM STREET PARAMETERS

CLASSIFICATION	R-O-W WIDTH (in feet)	LANE/PAVEMENT WIDTH (in feet)	PLATE REFERENCE (for pavement design)
Major Arterial			
1) 4-lane undivided	70	12(tl) = 52(ff)	4401
2) 4-lane divided	80	11(tl) = 64(ff)	4402
3) 4-lane divided	90	12(tl) = 68(ff)	4403
4) 6-lane divided	110	11(tl) = 86(ff)	4404
5) 6-lane divided	110	12(tl) = 92(ff)	4405
Feeder			
1) Collector	60	12(tl) = 40(ff)	4406
2) Minor Arterial	70	11(tl) = 48(ff)	4407
Residential			
1) * Non-through streets	40	11(tl) = 30(ff)	4408
2) Through streets	50	10(tl) = 36(ff)	4408
Private Street			
1) Without Parking	50(ca)	11(tl) = 26(ff)	4409
2) W/Parking on One Side	50(ca)	10.5(tl) = 31(ff)	4409
3) W/Parking on Two Sides	50(ca)	10(tl) = 36(ff)	4409

(tl) = travel lane (ff) = face of curb to face of curb
(ca) = clear area, no right-of-way * conditions specified in Subdivision Ordinance

Table 4-2

MINIMUM RESIDENTIAL STREET SECTIONS
(in inches)

DESIGN CBR [1]	EQUIVALENT FULL-DEPTH BITUMINOUS CONCRETE [2]	STANDARD PAVEMENT SECTION 1-1/2" SM-2A (S-5) 2-1/2" BM-2 (B-3) 8" CRUSHER RUN PLUS CBR-20 MATERIAL [3] SHOWN BELOW
2.0	11.0	15.0 (11"of #3 stone preferred)
2.5	10.5	13.5 (9.5" of #3 stone preferred)
3.0	10.0	12.0 (8" of #3 stone preferred)
4.0	9.0	9.5 (6" of #3 stone preferred)
5.0	8.5	8.0 (5" of #3 stone preferred)
6.0	8.0	7.0
7.0	7.5	5.5
8.0	7.5	5.5
9.0	7.0	4.0
10.0	7.0	4.0
15.0	6.0	--.-
20.0	6.0	--.-

[1]The value in this column reflects the design CBR, which is two-thirds of the soaked subgrade CBR. Tests for CBR shall be in accordance with ASTM D1883. Eight inches of the subgrade shall be treated with 36#/sq.yd. of lime stabilization when: (1) the Director concludes that CBR values are too low to sustain adequate pavement performance; (2) percent swell exceeds 0.75; or (3) more than 60 percent of the soil passes the #200 sieve. A pavement underdrain system, according to VDOT, shall be required when the design CBR is 6 or less in conjunction with CBR-20 material or stone subbase, but the Director may require an underdrain system when he concludes that an underdrain system is necessary to prevent pavement failure prior to expiration of the design period.

[2] Must be constructed on a minimum of 4" of #3 stone base (platform) to support paving machine.

[3] CBR minimum 20, liquid limit 25, P.I. maximum 6; compacted to 95 percent of lab density by AASHTO-T180 method "D"; minimum depth 12".

4.2.3 Design Period. The design period for pavement is stated in years and is defined as cumulative effects of traffic for a specific period of time. At the end of the design period, it can be expected that the pavement may require an asphalt overlay to restore high-level riding quality. For all pavements in the City of Newport News, the design period shall be for not less than 20 years.

4.2.4 Plans. Streets and all other infrastructure items shall be shown on plans. Each element, including profile information, shall be referenced to a proposed street centerline, an existing benchmark or other fixed point. Plans shall be drawn on 36" X 24" sheets, with an appropriate scale, vicinity map, north arrow and title block.

4.2.5 Traffic. Using sound engineering techniques, designers shall calculate estimated traffic volumes, including cars, trucks in all categories, and traffic growth for the required design period.

4.2.6 Narrative. The designer shall provide a narrative that addresses areas surrounding the development for current and future street routing/capacity requirements, with consideration of the City comprehensive planning document, "Framework for the Future."

4.2.7 Alternatives/Recommendation. The designer shall consider lime stabilization and at least one other alternative for each pavement section and provide a narrative justification for selecting the alternative recommended.

4.3CONSTRUCTION

4.3.1 Utilities. All utilities shall be placed in accordance with criteria reflected in this manual prior to lime stabilization or asphalt placement activities.

4.3.2 Drainage. The designer shall provide for adequate drainage and erosion control of curbed streets during periods when pavement will be below the curb inlet opening.

4.3.3 Proof-rolling. Each pavement section layer, including subgrade, shall be proof-rolled and failures in any layer shall be corrected by undercut/backfill prior to placing the next layer.

4.3.4 Compaction. All compaction tests required by the designer shall be completed on CBR-20 material, crusher run and asphalt by an independent soils engineer. Test results on each course shall be examined and approved by the Director or his designated representative prior to the placement of the next course.

4.3.5 Final Asphalt Surface. The final SM-2A (S-5) bituminous concrete surface shall be placed to finished design grade on the BM-2 (B-3) or IM-1A (I-2) bituminous concrete as soon as possible. Asphalt base course shall not be left exposed to inclement weather and shall be covered during the winter season.

4.4ROADWAY DESIGN FACTORS

4.4.1 Intersection Sight Distance:

a. The design of intersections shall include sight distance requirements set forth in *A Policy on Geometric Design of Highways and Streets* (AASHTO, 1990 or latest edition).

b. The values provided in Table 4-3 of this chapter shall be considered as minimum sight distance values for intersections on arterial streets.

4.4.2 Intersection and Crossover Spacing. Minimum intersection spacing and median break crossover separation shall be based upon the design speed of the street. The minimum spacing requirements reflected in Table 4-4 of this chapter shall apply.

a. Spacing of intersections may be reduced to the minimum sight distance standards specified in Table 4-3 for either:

(1) Existing undivided streets, or

(2) Where no crossover is proposed for an intersecting street on a divided highway.

Table 4-3

SIGHT DISTANCE
ALONG MAJOR ROAD AT INTERSECTION WITH MINOR ROAD, CROSSOVER, AND COMMERCIAL ENTRANCE

DESIGN SPEED (in mph)	SIGHT DISTANCE	
	2-LANE (in feet)	4 OR MORE LANES (in feet)
25	250	300
30	300	350
35	350	425
40	400	475
45	450	525
50	500	600
55	550	650

Table 4-4

INTERSECTION SPACING

DESIGN SPEED (in mph)	* INTERSECTION AND CROSSOVER SPACING (in feet)
35 or less	500
40	600
45	650
50	700
55	800

* For undivided streets or where no crossover is provided for an intersecting street or a divided highway, intersection spacing may be reduced to the minimum sight distance standards specified in Table 4-3.

(3) If spacing that is less than the criteria reflected in Table 4-4 should be desired for any other application, vertical and horizontal sight distance requirements shall be satisfied as detailed in *A Policy on Geometric Design of Highways and Streets* (AASHTO, 1990 or latest edition). A request for an exception shall be subject to the approval of the Director.

b. Spacing of crossovers that is less than that specified in Table 4-4 will not be considered.

4.4.3 L-Intersection. An L-intersection shall not be allowed.

4.4.4 Curb & Gutter and Median Curb. Curb and gutter and median curb shall be designed in accordance with plate 4410. VDOT standard CG-7 (plate 4411), a mountable combination curb and gutter design, may be used for high density developments with closely spaced driveways, as approved by the Director.

4.4.5 Minimum Centerline Street Radii. The minimum centerline radius of new City streets, both commercial and residential, shall be in accordance with plate 4412. Extreme topographic circumstances could be a factor in some cases if a lesser radius is submitted. Super elevation can be used in some instances to reduce these radial requirements but only with the prior approval of the Director.

4.4.6 Guardrail. Guardrail criteria are based on the *Roadside Design Guide* (AASHTO, 1989), Location and Design Division Memorandum LD-89(D)104.6 (VDOT, March 17, 1989), and *Road and Bridge Standards* (VDOT, January 1, 1993), or the latest version of any of these documents. Guardrail should only be used where the result of striking the object or leaving the street would be more severe than the consequence of striking the guardrail. Guardrail posts shall be steel.

4.4.7 Right-of-way Monuments. Right-of-way monuments are required on any right-of-way that is or will be dedicated to the City (refer to plate 4413).

4.4.8 Cul-de-sacs:

a. A residential cul-de-sac shall be designed according to plate 4414.

b. A future extension cul-de-sac shall be designed according to plate 4415. The land required to accommodate a future extension cul-de-sac shall be created and dedicated when a new street right-of-way is dead ended at adjacent undeveloped land. If the adjacent land changes use and it becomes not advantageous to extend the street, a circular or hammerhead style turnaround can be built.

c. A commercial cul-de-sac shall be designed according to plate 4416.

4.4.9 Driveway Aprons. All driveway aprons shall extend from the edge of existing pavement or curb line to the right-of-way line. Driveway apron material shall match the material of the adjacent curb and gutter (existing or proposed) unless the Director approves the use of another material. Where proposed aprons adjoin existing curb and gutter, the curb facing must be broken off full-depth vertically. If the existing gutter is cracked, broken, rolled or not on grade, the entire curb and gutter section at the apron location must be removed prior to installing the new apron. Driveway aprons associated with entrances in designated Historical Areas shall be considered in accordance with other factors listed in this chapter.

4.4.10 Entrances:

a. Commercial entrances shall be built constructed in accordance with plates 4417 through 4420, as applicable. Proposals for constructing an entrance of a material other than concrete will be submitted to the Director for review and approval.

(1) Where pedestrian traffic is more than 100 pedestrians per hour or vehicular traffic at the entrance is 20 or fewer vehicle trips per hour, the entrance design shall conform to plate 4418 or 4419. Where high volume vehicular traffic and moderate to high speeds exist on the adjacent street, handicap access ramps shall be specified according to plate 4417.

(2) Driveways which serve as ingress and egress to commercially zoned or developed land shall be no less than 30 feet wide unless unusual conditions exist that warrant application of one-way directional use or angled entrances. Lot frontage limitations shall not dictate the use of entrances that are less than standard width.

(3) The maximum driveway width allowed for typical applications shall be 50 feet, measured at the right-of-way line. Such width is normally reserved for use as ingress/egress to sites where high volumes of large trucks are anticipated. EXCEPTION: The maximum driveway width may be increased where the Director determines that public facility safety and/or emergency medical service vehicular access requires increased radii and no off-street parking or loading spaces are involved.

(4) Plate 4418 should be specified where commercial truck traffic or on-street delivery vehicles are anticipated to commercial sites in business districts. Application considers that there is not a significant grade differential between the street and the site, which would impact "low-bodied," over-dimensional vehicles such as car carriers. Minimum entrance radii of 25 feet shall apply.

(5) Minimum radii shall be 15 feet but shall be increased to 25 feet where space is available behind the curb. Provisions for an increased right turn radius, an abbreviated right turn taper or full width right turn deceleration lane will conform to criteria contained in VDOT *Minimum Standards of Entrances to State Highways* or as deemed necessary by the Director. Turn lane taper designs shall be in accordance with plate 4420. The minimum taper length of 30 feet shall be increased by 10 feet for every five miles per hour where the speed limit is in excess of 25 miles per hour.

(6) Multiple entrances for a given street frontage, if permitted, shall conform to provisions of the Driveway Access Policy that is set forth in Appendix 1 to this chapter.

(7) The minimum distance from the extended projection of the intersecting curbs to the beginning of an entrance shall be 50 feet for right-angled intersections and 60 feet if either of the streets are divided by a median. Entrances into shopping centers from side streets shall be no closer than 100 feet from the intersecting curb line on the arterial to the beginning of the entrance. All measurements shall be taken at the right-of-way line.

b. Residential concrete entrances shall be constructed in accordance with plate 4421 for areas with curb and gutter and plate 4422 for areas without curb and gutter. Proposals for constructing an entrance of a material other than concrete shall be submitted to

the Director for review and approval. Asphalt entrances that are approved by the Director shall be designed in accordance with plate 4423. In no case shall any driveway apron be permitted to encroach into the radius of intersecting streets.

c. Proposed designs for entrances in designated Historical Areas shall be reviewed by the Director on an individual basis, considering recommendations of the appropriate area Architectural Review Committee (or similar organization) as well as generally accepted and/or required civil and architectural techniques and practices and in accordance with the Zoning Ordinance.

4.4.11 Sidewalks and Bikepaths. Sidewalks and bikepaths, when constructed within the City rights-of-way, shall be a minimum of four-inch-thick concrete, unless the Director approves the use of a different material. Where sidewalk is constructed in conjunction with street intersections, a standard handicap ramp (VDOT CG-12) shall be used. Handicap ramps shall be designed in accordance with plates 4424 through 4426.

a. Residential sidewalks shall be designed in accordance with plate 4427 with a minimum width of four feet on a 40-foot right-of-way and with a minimum width of five feet when the right-of-way is 50 feet or wider. All sidewalks shall be laid on four-mil black polyethylene.

b. Commercial sidewalks shall be designed according to plate 4427 (minimum width of five feet along major thoroughfares). Either a seven-foot sidewalk shall be constructed directly behind the curb or a minimum five-foot green strip provided along with a five-foot sidewalk for rights-of-way greater than 60 feet. For rights-of-way 60 feet or less, a five-foot wide sidewalk shall be provided directly behind the curb. When sidewalk is installed within 250 feet of an intersection, the sidewalk shall be seven feet wide and directly behind the curb. Where any sidewalk intersects with a CG-10A-NN driveway, a handicap down-ramp sidewalk shall be provided (refer to plate 4424).

c. When a bikepath is proposed, it shall be separated from motorized vehicular traffic by an open space or barrier. Bikepaths shall be placed in accordance with the approved Bikeway Plan as detailed in the City comprehensive planning document "Framework for the Future" or as required by the Director.

(1) Bikepaths shall be designed according to plate 4428, 4429 or 4430, as applicable. Two-way bikepaths shall be at least 10 feet wide (see plate 4428 or 4430, as applicable) unless the Director approves an eight-foot-wide bikepath as detailed on plate 4430 for specific applications. One-way bikepaths have a limited application and shall be at least five feet in width (see plate 4428 or 4429, as applicable). Bikepaths shall be designed to ensure continuity and minimal conflicts with motor vehicle crossflows and intersections with highways.

(2) Striping shall be placed to show lane usage. New bikepaths that intersect with street connections or CG-10A-NN standard entrances shall provide for handicap curb cut ramps as detailed in this chapter.

4.4.12 Handicap Parking. In addition to other handicap access provisions as detailed elsewhere in this chapter, accessible parallel on-street parking spaces shall be designed according to plate 4431. See plate 4432 or 4433, as applicable, for designs related to off-street handicap and van accessible parking spaces.

4.4.13 Streetlight Poles and Luminaires. A standard City streetlight assembly shall consist of a standard-length concrete, wood, steel or aluminum pole to match existing conditions, enclosed lens cobra head luminaire and minimum six-foot aluminum bracket. The minimum mounting height shall be 25 feet. The pole shall be located as near as possible to the right-of-way line in residential areas and at least behind the sidewalk in other areas. Where ornamental lighting is to be considered requiring Type V light distribution, placement in the sidewalk area shall be subject to the approval of the Director. A clear area of nine feet shall be provided between pole and edge of travel lane in the absence of curb and gutter, if right-of-way space permits. A longer bracket shall also be required in order to place the new luminaire at least over the edge of pavement and/or curb line. The luminance level, spacing and size luminaire to be used shall require the prior approval of the Director. Minimum maintained lighting shall conform to the following: (1) For public streets, 0.4 footcandles of luminance shall be specified for local and collector streets; and, (2) 0.7 footcandles of luminance shall be specified for arterial streets. These levels are increased to 0.7 footcandles for collector streets and 1.4 footcandles for arterial streets, respectively, where crime statistics for violent and drug-related crimes warrant increased levels of visibility.

4.4.14 Private Street. Private streets, if permitted, shall be in accordance with the Subdivision Ordinance and shall be designed with curb and gutter at the minimum widths specified in Table 4.1. Streets shall be designed in accordance with plate 4409 and shall be centered in a 50-foot wide area that is clear of buildings and structures. Lighting shall be provided and shall conform to standards specified in chapter six of this manual. Street name signs of 10 or fewer letters shall be manufactured and installed by City forces, and the costs for the same shall be borne by the developer/requestor.

4.5DEAD-END STREET TREATMENTS

Dead-end street treatments may consider the alternate designs for delineation of either a dead-end barricade or post-mounted object markers. Selection of "barricade" versus "object marker" end treatment shall be based on placement of the device that provides adequate safety warning; however, the placement of guardrail shall not result in the occurrence of a more severe accident than would occur without the presence of guardrail barricades.

4.5.1 Barricades:

a. Barricades, designed according to plate 4434, shall be provided at the dead-end point of all streets in subdivisions as well as at other locations if the Director concludes that public safety conditions warrant.

b. Dead-end street barricades shall be constructed of guardrail conforming to VDOT standard for GR-2 guardrail on metal posts only. Flared end section shall be installed on the ends of the guardrail sections. Panels of aluminum blanks (0.080" thick X 9" wide X 32" long) shall be fabricated with encapsulated lens (high intensity) silver sheeting screened with 45-degree diagonal red stripes (6" wide). Panels shall be pop-riveted to the front of the guardrail from flared end section to flared end section as shown on plate 4434.

4.5.2 Object Markers:

a. End-of-road object markers, where approved for use by the Director, shall be 18" X 18" encapsulated or diamond grade sheeting sign panels with 3" circular reflective markers as detailed on plate 4434 (or equivalent per section 3C-4 of the *Manual on*

Uniform Traffic Control Devices). The sign panels shall be post-mounted with a 4' minimum mounting height and posts spaced 6' on center.

b. Where object markers are specified, the W14-1 (30" X 30") diagonal "Dead End" warning sign or the W14-1P (36" X 12") directional "Dead End" advance warning sign shall be used in conjunction with the object marker design.

4.6TRAFFIC CONTROL

Traffic control devices shall be designed and used for all construction and maintenance operations in accordance with the latest edition of the *Virginia Work Area Protection Manual* unless otherwise noted in this manual or required by the Director. Other resource documents are the *Manual on Uniform Traffic Control Devices (MUTCD)* and the *Virginia Supplement of the Manual on Uniform Traffic Control Devices*.

4.6.1 Applicability. Traffic control requirements listed herein shall be applicable to City forces, contractors, utility companies, etc. working within Newport News. Any request to deviate from these requirements due to unusual circumstances must be approved by the Director prior to implementation.

a. Type I or Type II barricades shall not be used in the City right-of-way except for sidewalk construction and maintenance activities outside the limits of the street travelway.

b. Most streets in the City are considered to be secondary highways for the purpose of traffic control. The Department of Engineering maintains a list of those streets that are designated as primary highways.

c. Work-hour restrictions may apply for lane/street closures. Contact the Department of Engineering for specific guidelines.

d. City construction contracts and right-of-way permits require preparation of traffic sign plans by the requester and approval by the Director or assigned representative prior to beginning construction. Refer to contract documents or right-of-way permit forms for specific requirements.

e. The City reserves the right to require modifications to the traffic conditions or traffic control sign plan as deemed necessary.

4.6.2 Traffic Control Easement. Land developers and/or landowners shall grant the City an easement of at least five feet in width across the rear and/or side of all reverse frontage lots for the purpose of controlling ingress and egress. This easement shall be identified as an "Traffic Control Easement" and be treated as a limited access line for the purpose of restricting access to and from the site and prohibiting entrance construction. This easement can be combined with easements that may be needed for other municipal purposes. Privacy fencing may be erected in an easement that is designated as a "Traffic Control Easement" where no other buffer restrictions apply.

4.7DRIVEWAY ACCESS

4.7.1 Policy Established. The safety and efficiency of a street depend on the amount and type of interference that impacts vehicles using it. To protect the public interests, the City Council has established a *Driveway Access Policy*, which is included as Appendix 1 to this chapter. The policy in effect at the time of design shall be used and shall be included in this manual by addendum as soon as practicable.

4.7.2 Supplementary Design Aids. The following criteria, along with Appendix 1 and the information provided in Table 4-5, shall be used in determining where to place a **non-residential driveway** and in specifying the spacing for the same:

(1) Each parcel shall be entitled to a minimum of one driveway per public street frontage, provided access is not restricted by the requirement for dedicating a "Traffic Control Easement" to the City.

(2) Additional driveways will be considered for a parcel if and when traffic volume to and from the parcel exceeds 500 vehicles per day as defined by the latest Institute of Transportation Engineers trip generation criteria.

Table 4-5

NON-RESIDENTIAL DRIVEWAY SPACING PER PUBLIC STREET FRONTAGE

REQUIRED FRONTAGE (in feet)	DRIVEWAYS ALLOWABLE (per site)	MINIMUM SPACING BETWEEN DRIVEWAYS (in feet)	MINIMUM DISTANCE TO THE PROPERTY LINE (in feet)
215-399	2	75	30
400-709	3	100	40
710+	* 4+	150	50

* A request for four or more driveways on a public street frontage must conform to criteria contained in the *Driveway Access Policy*.

4.8DESIGN STANDARD PLATES

Design standard plates for this chapter are:

Number	Title
4401	Major Arterial Street Section (Minimum 70' Right-of-Way; Undivided Roadway--12' Travel Lanes)
4402	Major Arterial Street Section (Minimum 80' Right-of-Way; Divided Roadway--11' Travel Lanes)
4403	Major Arterial Street Section (Minimum 90' Right-of-Way; Federal Standard; Divided Roadway--12' Travel Lanes)
4404	Major Arterial Street Section (Minimum 110' Right-of-Way; Divided Roadway--11' Travel Lanes)
4405	Major Arterial Street Section (Minimum 110' Right-of-Way; Divided Roadway--12' Travel Lanes)
4406	Collector Street Section (60' Right-of-Way)
4407	Minor Arterial Street Section (70' Right-of-Way; Undivided Roadway--11' Travel Lanes)
4408	Residential Street Section (40' & 50' Rights-of-Way)
4409	Private Street Section
4410	6" Combination Curb & Gutter and Median Curb
4411	4" Combination Curb & Gutter and Median Curb
4412	Street Centerline Radii
4413	Right-of-Way Monuments
4414	Residential Cul-de-sac
4415	Residential Cul-de-sac w/Future Extension
4416	Commercial Cul-de-sac
4417	Commercial Entrance (CG-10A-NN)
4418	Commercial Entrance (CG-13-NN)
4419	Commercial Entrance (VDOT CG-9D)
4420	Commercial Entrance Taper
4421	Residential Concrete Entrance (Streets w/Curb & Gutter)

4422 ..... Residential Concrete Entrance (Streets w/o Curb & Gutter)
4423 ..... Residential Asphalt Entrance (Streets w/o Curb & Gutter)
4424 ..... H/C Curb Ramp (Perpendicular; Non-Parkway)
4425 ..... H/C Curb Ramp (Parallel; Non-Parkway)
4426 ..... H/C Curb Ramp (Parkway Setback)
4427 ..... Sidewalk (Cross-section)
4428 ..... Bikepath
4429 ..... Combination Sidewalk/Bikepath (One-Way Design; Both Sides of Street)
4430 ..... Combination Sidewalk/Bikepath (Two-Way Design; One Side of Street)
4431 ..... Accessible Parallel On-Street Parking Spaces
4432 ..... Typical Handicap Parking Space
4433 ..... Accessible Van Handicap Parking Space
4434 ..... Dead-End Street Treatments

(Sections 4.9 through 4.99 are reserved. Section 5.0 is next.)

140 0238

kdk4692

RESOLUTION NO. 7681-94

A RESOLUTION TO AMEND AND READOPT A DRIVEWAY ACCESS POLICY FOR THE CITY OF NEWPORT NEWS.

WHEREAS, the Council adopted a "Driveway Access Policy" on May 15, 1990, in order to provide policy guidance regarding the permitted number and location of driveways for parcels of land within the City: and

WHEREAS, the City Manager, after recommendation by and consultation with the Department of Engineering, has forwarded a proposed modification to the Driveway Access Policy; and

WHEREAS, the Council has considered the new policy and concludes that it is in the public interest to approve it.

NOW, THEREFORE, BE IT RESOLVED by the Council of the City of Newport News that it desires to, and hereby does, adopt the Driveway Access Policy dated June 14, 1994, a copy of which is attached hereto and made a part hereof.

Sponsor:

Vincent Joseph, Councilman

PASSED BY THE COUNCIL OF THE CITY OF NEWPORT NEWS JUNE 14, 1994

Countersigned:

Barry E. DuVal, Mayor

Attest:

Bernice I. Berry, CMC/AAE
City Clerk
Roll Call Vote Resulted as follows:
Ayes: Martin, West, Williams, Allen, DuVal, Frank, Joseph
Nays: None

DRIVEWAY ACCESS POLICY
ADOPTED BY CITY COUNCIL MAY 15, 1990
REVISED JUNE 14, 1994

OBJECTIVE

The safety and efficiency of a roadway depends on the amount and type of interference impacting vehicles using it. A significant level of interference is caused by vehicles entering, exiting or crossing at driveways. In order to preserve roadway safety and capacity and to provide an economical alternative to the more costly, time-consuming and socially disruptive roadway reconstruction or relocation, it is necessary to regulate vehicle movements in and out of abutting developments.

The regulations prescribed in this document have been established to provide:

- A basis for maintaining the safety and quality of traffic flow for which a roadway was designed.
- A uniform policy for the number and location of driveways through their consistent application and enforcement.

It is recognized that no one set of regulations can apply to all driveway access situations. In instances where they cannot be applied, the professional judgement of the Director of Engineering or designated representative shall be determinative. Judgement shall take into consideration the individual situation and shall be based on the preservation of roadway safety and capacity. In no instance shall roadway safety or capacity be sacrificed without other capacity or safety enhancements as a balance. Furthermore, judgement shall not be based on possible financial difficulty, loss of profit or a previous decision.

It must be noted that this policy does not analytically use roadway speed or roadway geometrics (road width, median existence, right turn lanes or left turn lanes) to determine the number of driveways, driveway size, driveway design or driveway spacing.

DRIVEWAY TYPES

This policy recognizes only two (2) driveway types:

1. Residential - one providing access to a single-family or duplex residence.

2. Non-residential - one providing access to an office, retail or institutional building, or to a hotel, motel, condominium, multi-family or apartment dwelling or industrial facility. Driveways which serve any facility other than residential as described above.

Driveway type shall be defined by the type of land use developed on property served. If property is undeveloped, driveway type shall be defined by the zoning of property served. Driveways, as defined, shall include private streets and driveways, but not public streets.

DRIVEWAY SPACING

The choice of proper spacing for a driveway must involve consideration of the amount of conflict which can be expected on the abutting street(s) and within the parking area. This policy follows the principle that by limiting the number of driveways to a practical minimum, there will be fewer locations where conflicts occur.

In order to provide maximum safety with the least interference to traffic on the roadway system, in addition to providing ease and convenience for entry and exit to property, the separation of driveways shall be governed by:

- The amount of frontage a property has on a given street or streets.
- The land use type of the property served - single-family and duplex versus multi-family, commercial and industrial.
- The existing or forecasted average daily traffic for the property.

City standards (*Design Criteria Manual*) for the distance between an intersecting curb and driveway, driveway pavement widths, entrance radii and sight distance shall be binding in all cases.

The term "parcel" is defined as any single piece of property or group of adjacent properties with the same owner(s).

An existing unused driveway shall be closed if it does not meet the above standards, consistent with City Code section 38-40(c), provided that such closure does not deprive property access to the street.

A joint or shared driveway shall be encouraged. Where implemented, the number of driveways allowed to the parcel shall not be increased. Joint or shared driveways involve a legal document giving perpetual easement by adjoining parties rights across each others' property for use of the shared or joint driveway.

RESIDENTIAL (SINGLE-FAMILY AND DUPLEX)

Every residential parcel shall be entitled to at least one driveway.

No parcel shall have more than one driveway where the adjacent roadway carries 5,000 or more vehicles a day.

NON-RESIDENTIAL (MULTI-FAMILY, COMMERCIAL AND INDUSTRIAL)

Every commercial, multi-family and industrial parcel shall be entitled to at least one driveway.

Parcels may have more than one driveway per public street frontage subject to the following criteria:

a. Total volume to and from the parcel must be greater than 500 vehicles per day (based on latest Institute of Transportation Engineers Trip Generation figures or actual usage).

b. A parcel must have at least 215 feet of frontage on a roadway to have two driveways on that roadway. The spacing between driveways must be at least 75 feet, measured at the right-of-way line, versus the *Design Criteria Manual* standard 50 feet. The spacing between each driveway and respective property line must be at least 30 feet, measured at the right-of-way line, versus the *Design Criteria Manual* standard 25 feet.

c. A parcel must have at least 400 feet of frontage on a roadway to have three driveways on that roadway. The spacing between driveways must be at least 100 feet, measured at the right-of-way line, versus the *Design Criteria Manual* standard 50 feet. The spacing between each driveway and respective property line must be at least 40 feet, measured at the right-of-way line, versus the *Design Criteria Manual* standard 25 feet.

d. A property owner requesting four or more driveways on a roadway fronting their parcel must submit a statement of justification to the Director of Engineering or designated representative. If approved, at a minimum the parcel must have at least 710 feet of frontage on the given roadway. The spacing between driveways must be at least 150 feet, measured at the right-of-way line, versus the *Design Criteria Manual* standard 50 feet. The spacing between each driveway and respective property line must be at least 50 feet, measured at the right-of-way line, versus the *Design Criteria Manual* standard 25 feet.

Driveway spacing requirements shall apply to all roadways (arterials, collectors and locals) fronting a given property.

kdk4693

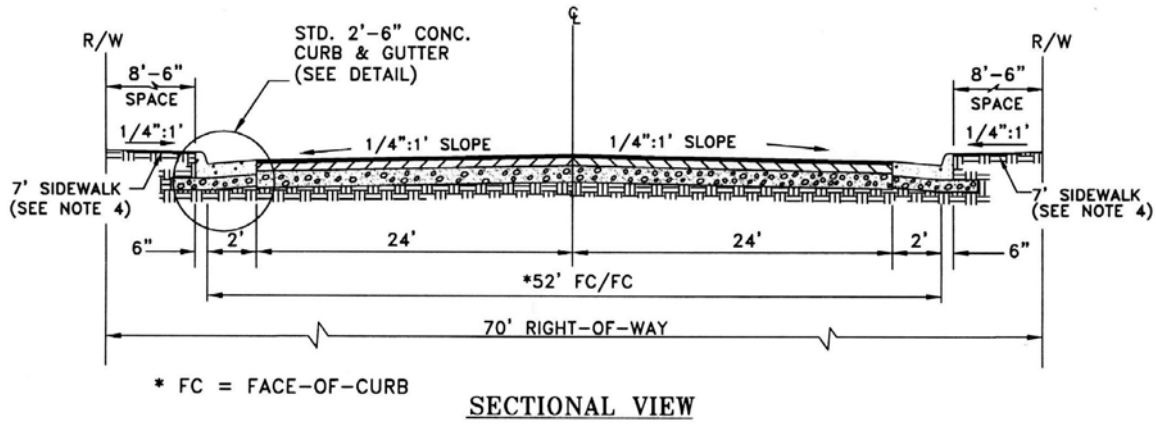

* FC = FACE-OF-CURB

SECTIONAL VIEW

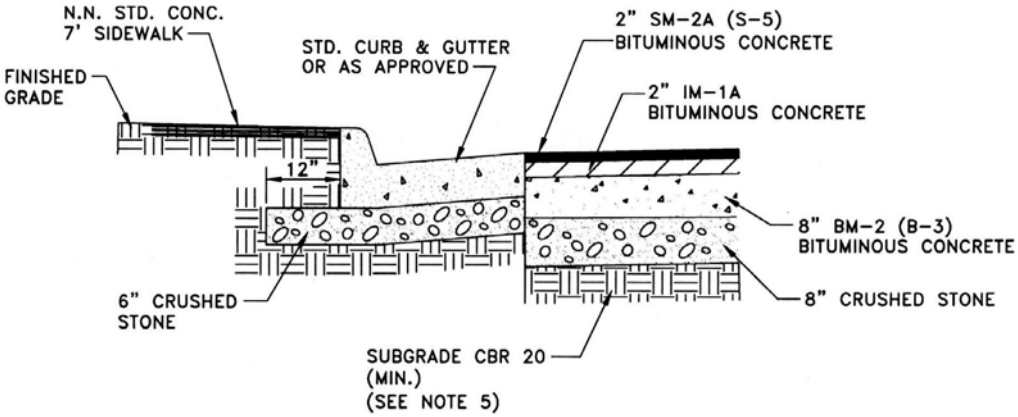

DETAIL

NOTES:

1. All cuts and fills adjacent to rights-of-way are to have a 2:1 slope or flatter.
2. Equivalent pavement sections will be considered as permitted by the Newport News *Design Criteria Manual.*
3. No on-street parking is permitted.
4. A seven-foot sidewalk is required on each side of the street.
5. Where soil conditions indicate subgrade CBR values less than 20, the undesirable material shall be treated with appropriate additives (e.g., lime) or by other means (e.g., geotechnical fabric) in accordance with site-specific conditions or removed and replaced with suitable material. In the latter case, required depth of removal will be based on specific site conditions.

Approved Revised March 2002

MOSTAFA A. SABBAH, Ph.D., P.E.
Director, Department of Engineering

MAJOR ARTERIAL STREET SECTION
MINIMUM 70' RIGHT-OF-WAY
UNDIVIDED ROADWAY-12' TRAVEL LANES
Plate 4401

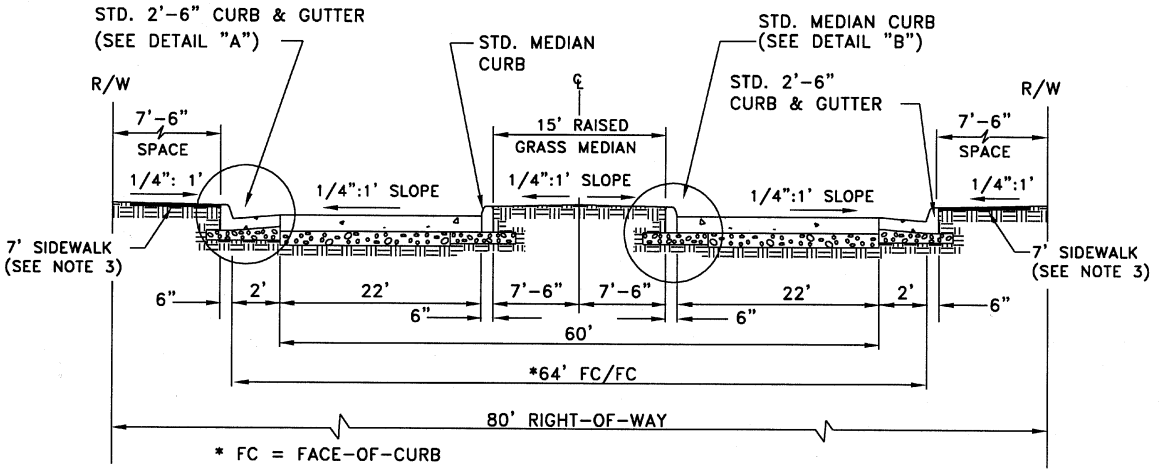

SECTIONAL VIEW

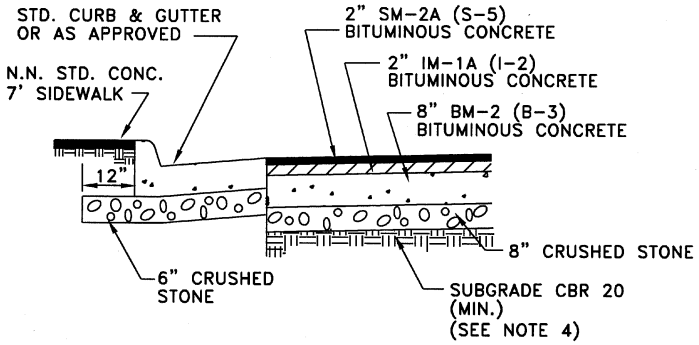

DETAIL "A"

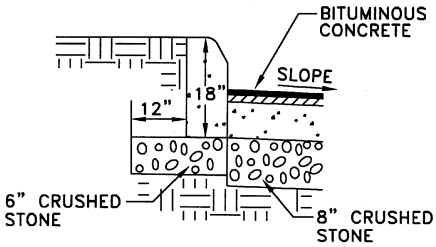

DETAIL "B"

NOTES:

1. All cuts and fills adjacent to rights-of way are to have a 2:1 slope or flatter.
2. Equivalent pavement sections will be considered as permitted by the Newport News *Design Criteria Manual.*
3. A seven-foot sidewalk is required on each side of street.
4. Where soil conditions indicate subgrade CBR values less than 20, the undesirable material shall be treated with appropriate additives (e.g., lime) or by other means (e.g., geotechnical fabric) in accordance with site-specific conditions or removed and replaced with suitable material. In the latter case, required depth of removal will be based on specific site conditions.

Approved August 1997

MOSTAFA A. SABBAH, Ph.D., P.E.
Director, Department of Engineering

MAJOR ARTERIAL STREET SECTION

MININUM 80' RIGHT-OF-WAY
DIVIDED ROADWAY-11' TRAVEL LANES

Plate 4402

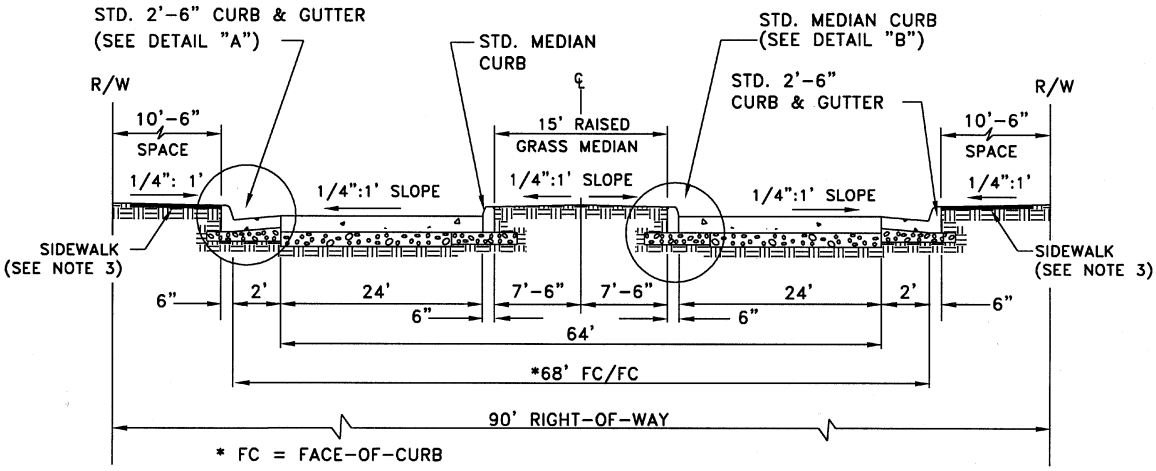

SECTIONAL VIEW

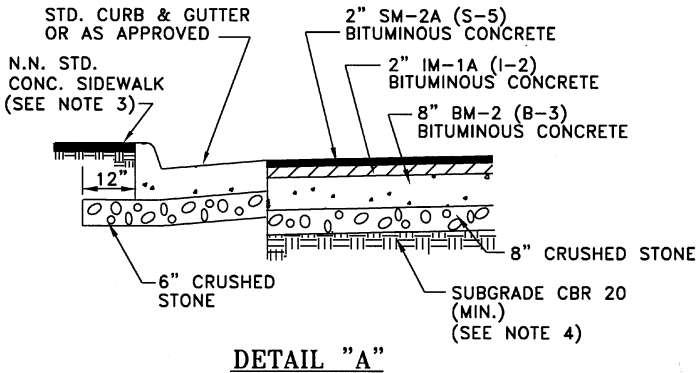

DETAIL "A"

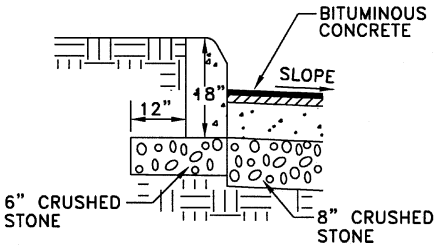

DETAIL "B"

NOTES:

1. All cuts and fills adjacent to rights-of-way are to have a 2:1 slope or flatter.
2. Equivalent pavement sections will be considered as permitted by the Newport News *Design Criteria Manual.*
3. A seven foot-sidewalk is required on each side of the street. An alternative design may consider a five-foot wide "green space" at the back-of-curb abutting a five-foot sidewalk, however the seven-foot sidewalk shall be required within 250' of an intersection.
4. Where soil conditions indicate subgrade CBR values less than 20, the undesirable material shall be treated with appropriate additives (e.g., lime) or by other means (e.g., geotechnical fabric) in accordance with site-specific conditions or removed and replaced with suitable material. In the latter case, required depth of removal will be based on specific site conditions.

CORPORATION OF NEWPORT NEWS VIRGINIA

Approved August 1997

MOSTAFA A. SABBAH, Ph.D., P.E.
Director, Department of Engineering

MAJOR ARTERIAL STREET SECTION
MINIMUM 90' RIGHT-OF-WAY
FEDERAL STANDARD
DIVIDED ROADWAY-12' TRAVEL LANES
Plate 4403

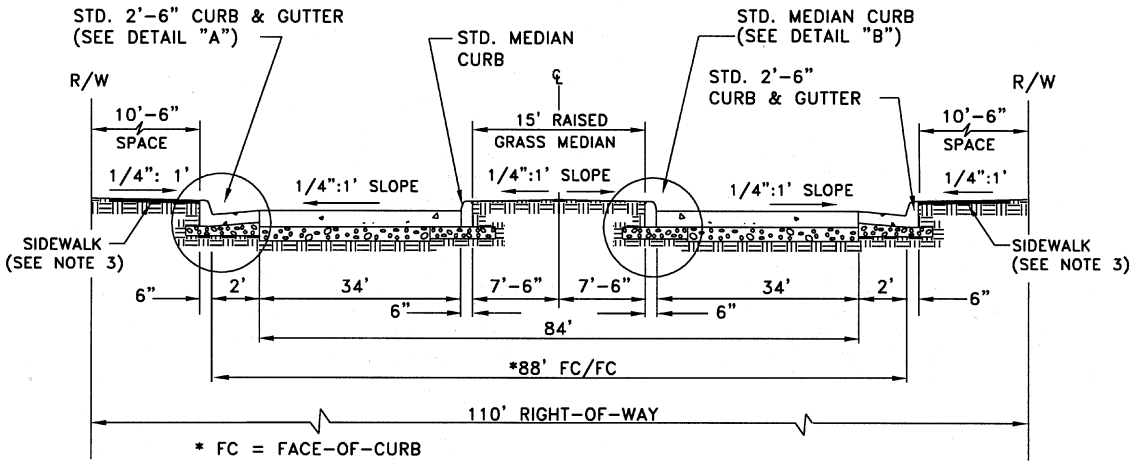

SECTIONAL VIEW

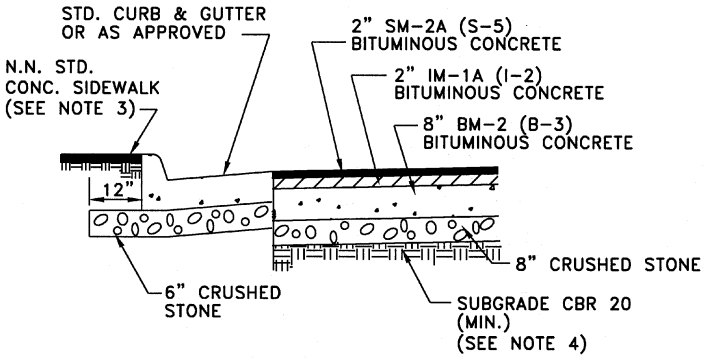

DETAIL "A"

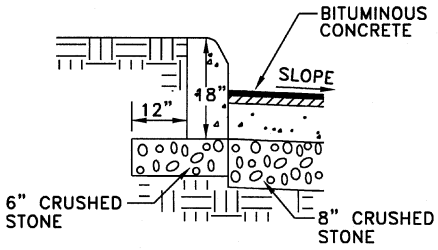

DETAIL "B"

NOTES:

1. All cuts and fills adjacent to rights-of-way are to have a 2:1 slope or flatter.
2. Equivalent pavement sections will be considered as permitted by the Newport News *Design Criteria Manual.*
3. A seven-foot sidewalk is required on each side of the street. An alternative design may consider a five-foot wide "green space" at the back-of-curb abutting a five-foot sidewalk, however the seven-foot sidewalk shall be required within 250' of an intersection.
4. Where soil conditions indicate subgrade CBR values less than 20, the undesirable material shall be treated with appropriate additives (e.g., lime) or by other means (e.g., geotechnical fabric) in accordance with site-specific conditions or removed and replaced with suitable material. In the latter case, required depth of removal will be based on specific site conditions.

Approved August 1997

MOSTAFA A. SABBAH, Ph.D., P.E.
Director, Department of Engineering

MAJOR ARTERIAL STREET SECTION

MINIMUM 110' RIGHT-OF-WAY
DIVIDED ROADWAY-11' TRAVEL LANES

Plate 4404

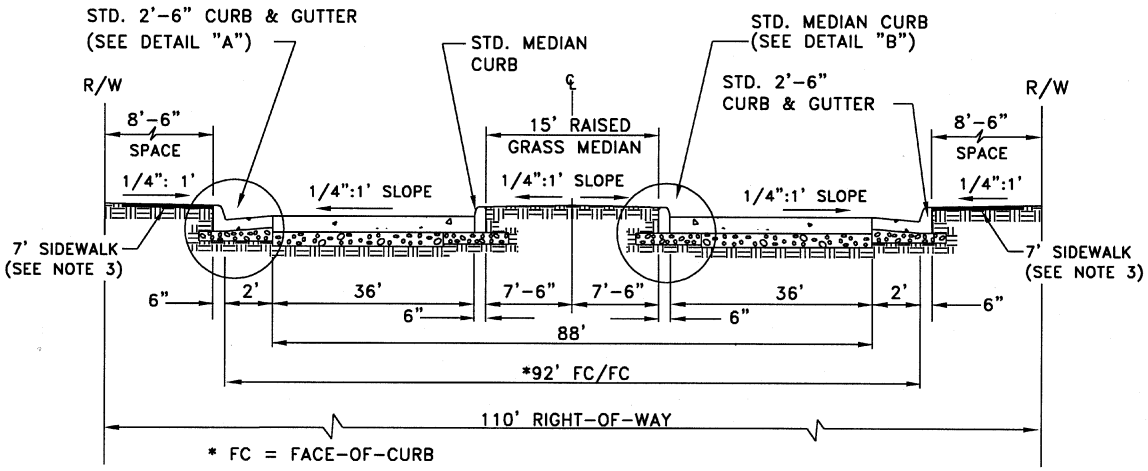

SECTIONAL VIEW

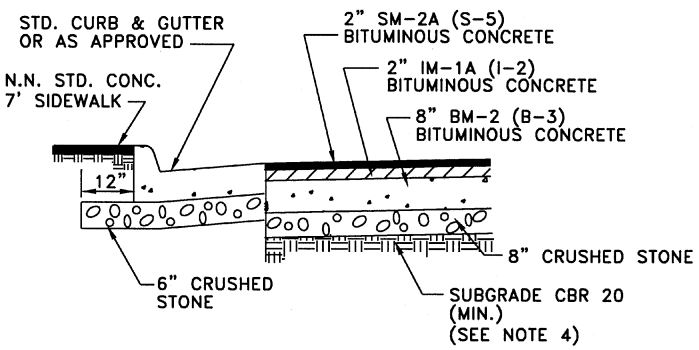

DETAIL "A"

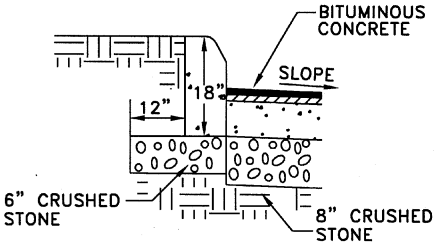

DETAIL "B"

NOTES:

1. All cuts and fills adjacent to rights-of-way are to have a 2:1 slope or flatter.
2. Equivalent pavement sections will be considered as permitted by the Newport News *Design Criteria Manual.*
3. A seven-foot sidewalk is required on each side of the street.
4. Where soil conditions indicate subgrade CBR values of less than 20, the undesirable material shall be treated with appropriate additives (e.g., lime) or by other means (e.g., geotechnical fabric) in accordance with site-specific conditions or removed and replaced with suitable material. In the latter case, required depth of removal will be based on specific site conditions.

Approved August 1997

MOSTAFA A. SABBAH, Ph.D., P.E.
Director, Department of Engineering

MAJOR ARTERIAL STREET SECTION

MINIMUM 110' RIGHT-OF-WAY
DIVIDED ROADWAY-12' TRAVEL LANES

Plate 4405

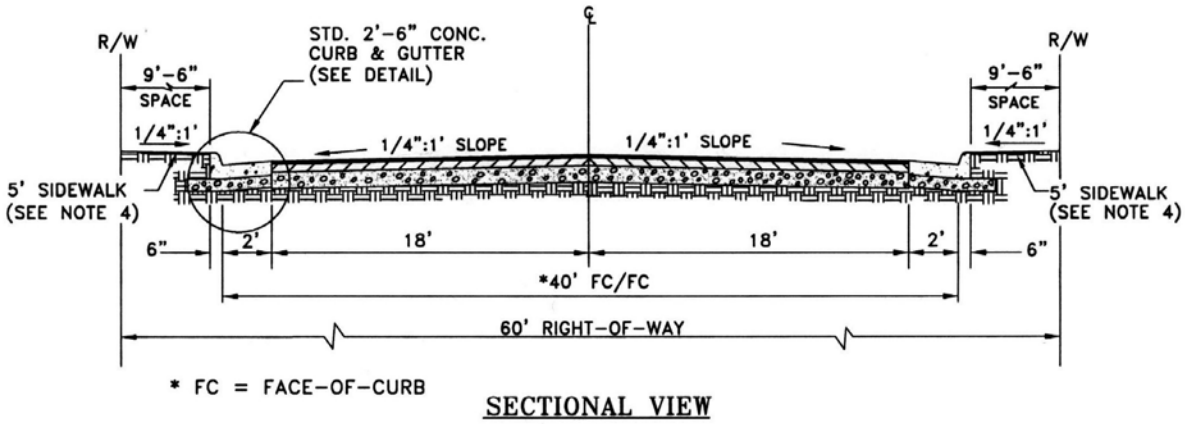

SECTIONAL VIEW

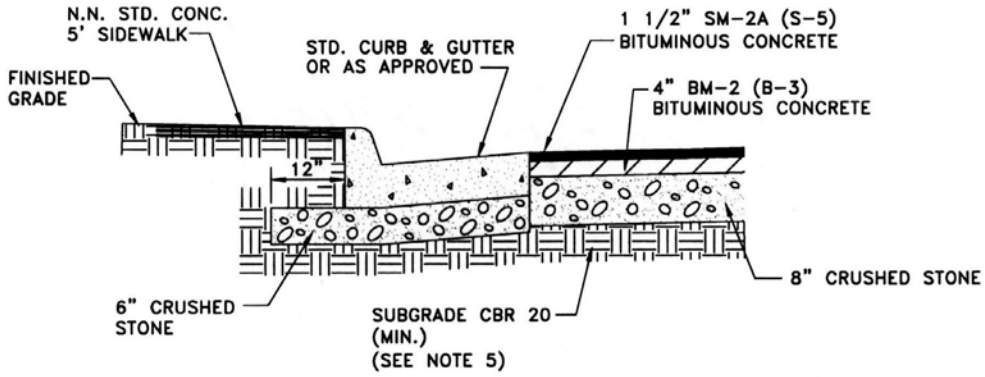

DETAIL

NOTES:

1. All cuts and fills adjacent to right-of-way to have a 2:1 slope or flatter.
2. Equivalent pavement sections will be considered as permitted by the Newport News *Design Criteria Manual*.
3. Alternative lane configurations will permit three 12' lanes with the center lane for left turns or allow for one 12' travel lane in each direction and an eight-foot parking lane on each side of the street.
4. A five-foot sidewalk is required on each side of the street.
5. Where soil conditions indicate subgrade CBR values less than 20, the undesirable material shall be treated with appropriate additives (e.g., lime) or by other means (e.g., geotechnical fabric) in accordance with site-specific conditions or removed and replaced with suitable material. In the latter case, required depth of removal will be based on specific site conditions.

Approved Revised March 2002

MOSTAFA A. SABBAH, Ph.D., P.E.
Director, Department of Engineering

COLLECTOR STREET SECTION
60' RIGHT-OF-WAY
Plate 4406

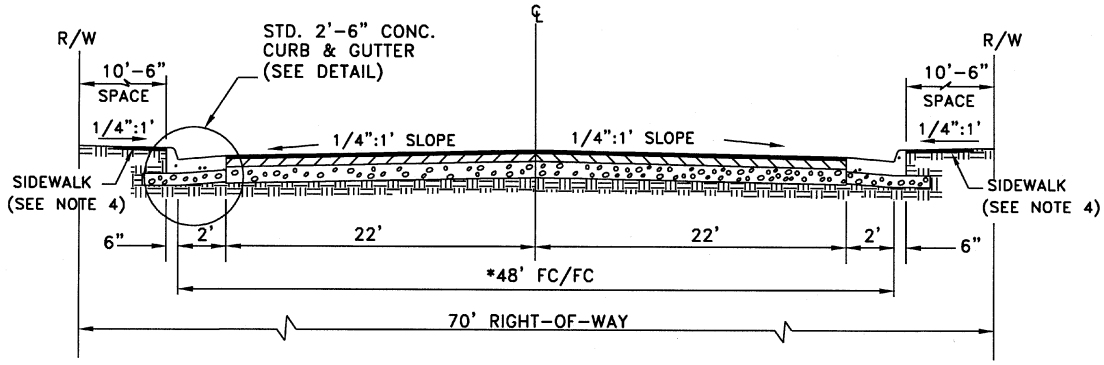

* FC = FACE-OF-CURB

SECTIONAL VIEW

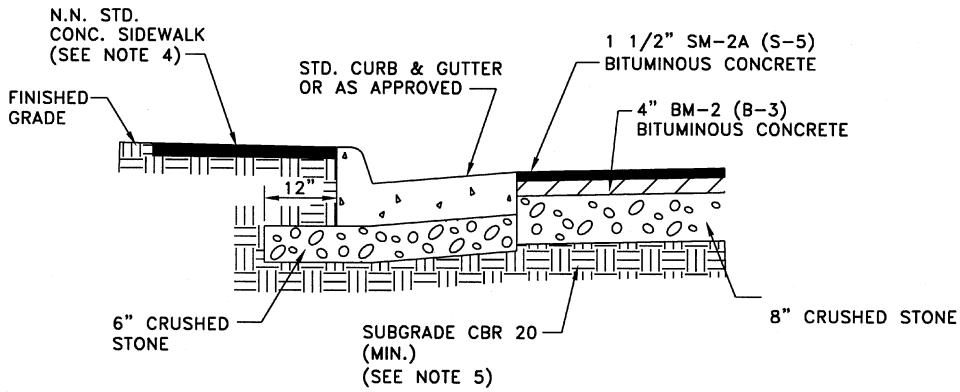

DETAIL

NOTES:

1. All cuts and fills adjacent to right-of-way are to have a 2:1 slope or flatter.
2. Equivalent pavement sections will be considered as permitted by the Newport News *Design Criteria Manual.*
3. No on-street parking is permitted.
4. A seven-foot sidewalk is required on each side of the street. An alternative design may consider a five-foot wide "green space" at the back-of-curb abutting a five-foot sidewalk, however the seven-foot sidewalk shall be required within 250' of an intersection.
5. This standard applies where a "feeder" roadway is required between major arterials and other minor arterials. Roadway demand is expected to be 8,000 vehicles or less per day, in either case.
6. Where soil conditions indicate subgrade CBR values less than 20, the undesirable material shall be treated with appropriate additives (e.g., lime) or by other means (e.g., geotechnical fabric) in accordance with site-specific conditions <u>or</u> removed and replaced with suitable material. In the latter case, required depth of removal will be based on specific site conditions.

CORPORATION OF NEWPORT NEWS VIRGINIA

Approved August 1997

MOSTAFA A. SABBAH, Ph.D., P.E.
Director, Department of Engineering

MINOR ARTERIAL STREET SECTION
70' RIGHT-OF-WAY
UNDIVIDED ROADWAY-11' TRAVEL LANES
Plate 4407

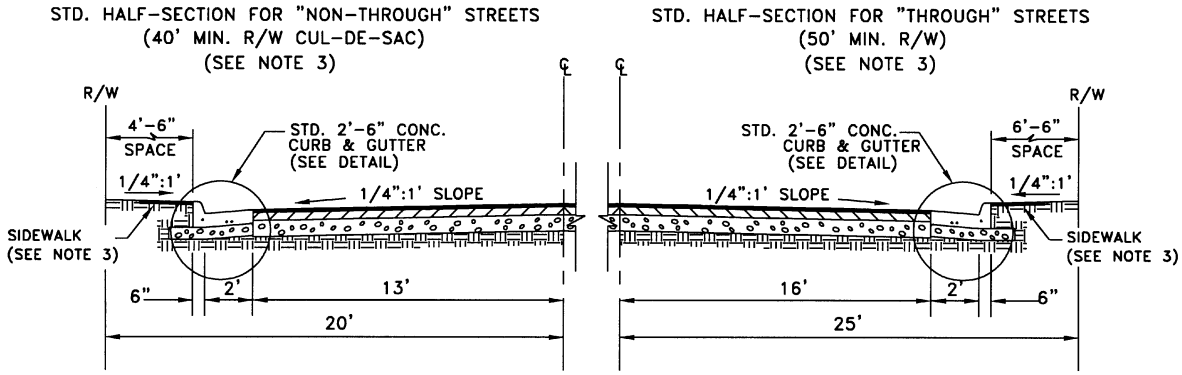

HALF SECTIONAL VIEW

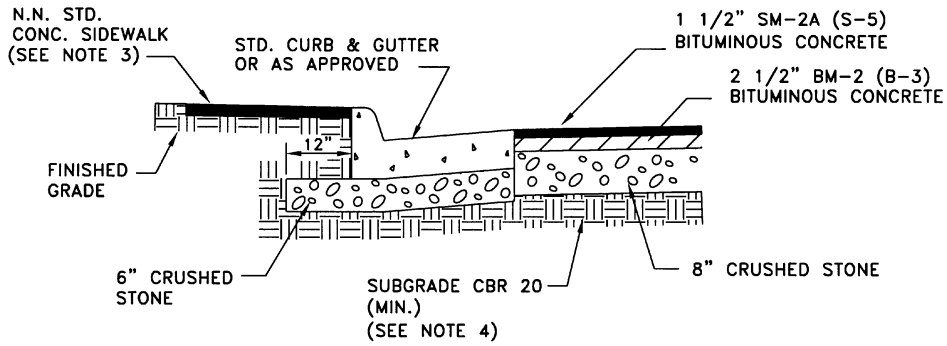

DETAIL

NOTES:

1. All cuts and fills adjacent to right-of-way are to have a 2:1 slope or flatter.
2. Equivalent pavement sections will be considered as permitted by the Newport News *Design Criteria Manual.*
3. The Director shall require sidewalks on residential (secondary collector) streets under conditions set forth in the Subdivision and Site Regulations ordinances. Where a 40' right-of-way is approved and based upon public safety considerations, the Director may require a sidewalk on the one side of the street on which parking is permitted.
4. Where soil conditions indicate subgrade CBR values less than 20, the undesirable material shall be treated with appropiate additives (e.g., lime) or by other means (e.g., geotechnical fabric) in accordance with site-specific conditions or removed and replaced with suitable material. In the latter case, required depth of removal will be based on specific site conditions.

Approved August 1997

MOSTAFA A. SABBAH, Ph.D., P.E.
Director, Department of Engineering

RESIDENTIAL STREET SECTION

40' & 50' RIGHTS-OF-WAY

Plate 4408

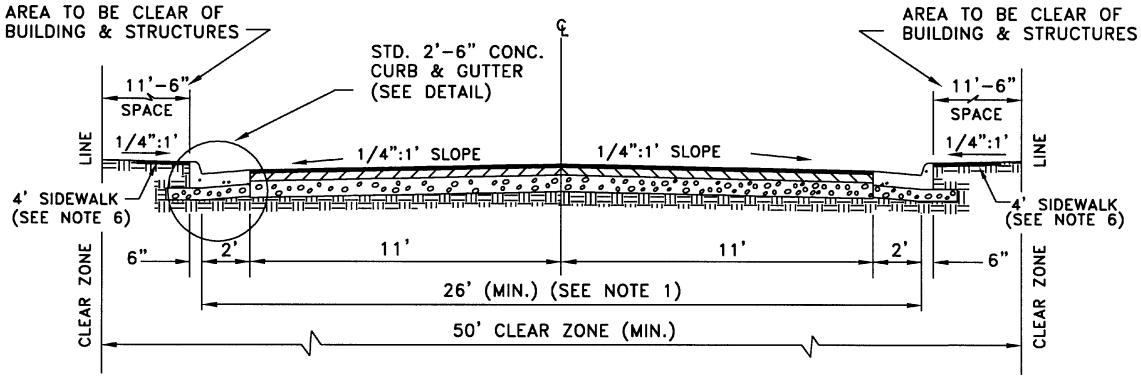

SECTIONAL VIEW

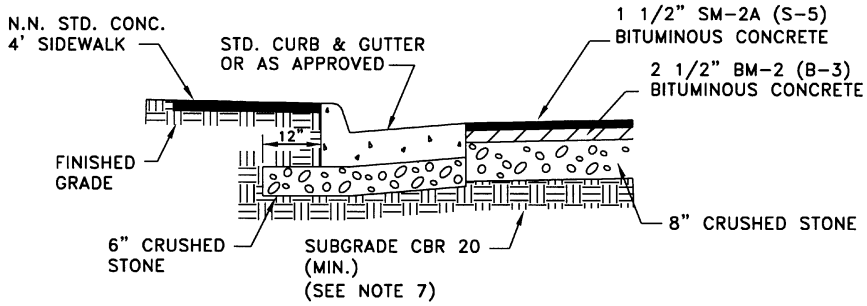

DETAIL

NOTES:

1. No parking is allowed on streets with a 26' "face-of-curb" to "face-of-curb" cross-section. The pavement must be widened to 31' for parking on one side of street. The pavement must be widened to 36' for parking on both sides of street.
2. All cuts and fills adjacent to clear-area lines related to the roadway are to have a 2:1 slope or flatter.
3. Equivalent pavement sections will be considered as permitted by the Newport News *Design Criteria Manual.*
4. Pavement must be centered in the required 50' clear area that is related to the roadway.
5. A mountable four-inch combination curb and gutter that is designed and is to be constructed according to Plate 4411 may be used as an alternate.
6. A four-foot sidewalk may be considered on the one side of the road where widened for parking on one side and on both sides of the road where widened for parking on both sides (optional).
7. Where soil conditions indicate subgrade CBR values of less than 20, the undesirable material shall be treated with appropriate additives (e.g., lime) or by other means (e.g., geotechnical fabric) in accordance with site-specific conditions or removed and replaced with suitable material. In the latter case, required depth of removal will be based on specific site conditions.

Approved August 1997

MOSTAFA A. SABBAH, Ph.D., P.E.
Director, Department of Engineering

PRIVATE STREET SECTION

Plate 4409

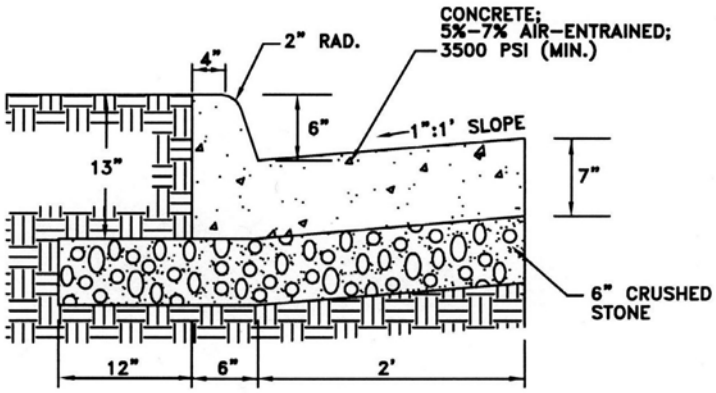

COMBINATION CURB & GUTTER SECTION

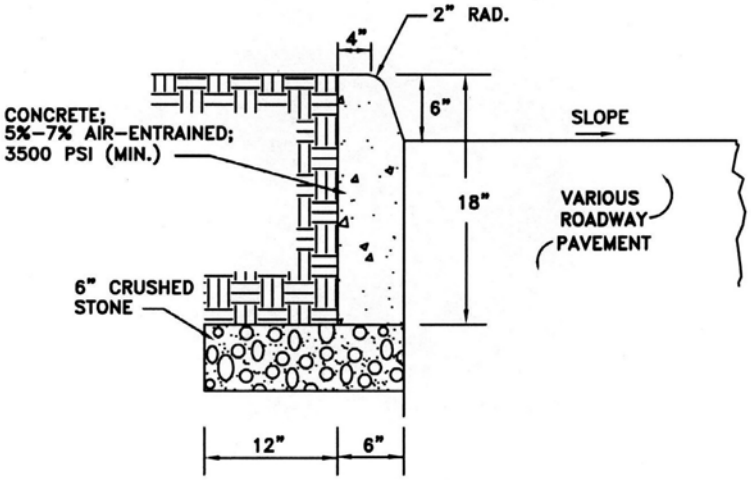

MEDIAN CURB SECTION

NOTE: There shall be a one–half inch premolded expansion joint every 50' (maximum) and every ten feet there should be a scoring crack control joint.

Approved Revised September 2005

MOSTAFA A. SABBAH, Ph.D., P.E.
Director, Department of Engineering

6" COMBINATION CURB & GUTTER AND MEDIAN CURB

Plate 4410

(Addendum 1, December 15, 2005)

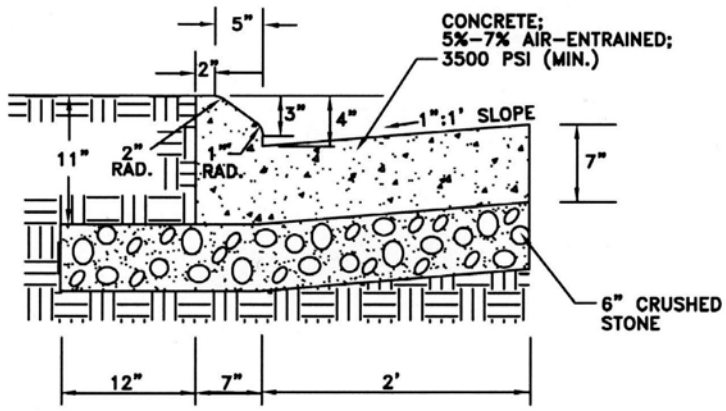

MOUNTABLE DESIGN COMBINATION CURB & GUTTER
(SEE NOTE 1)

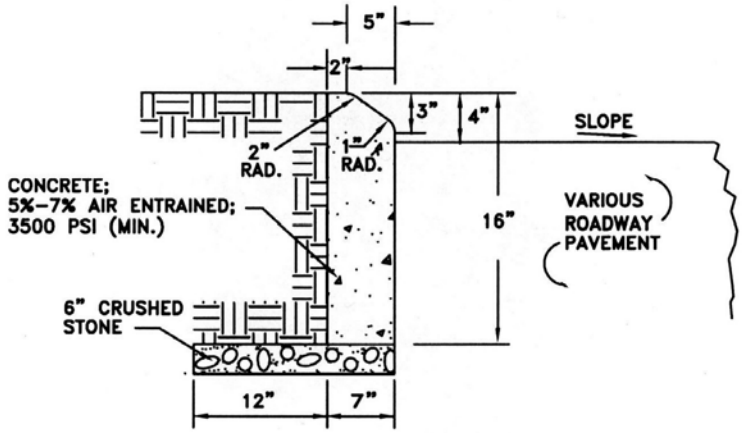

MOUNTABLE DESIGN MEDIAN CURB
(SEE NOTE 2)

NOTES:

1. There shall be a one–half inch premolded expansion joint every 50' (maximum) and every ten feet there should be a scoring crack control joint.
2. The depth of curb may be reduced by as much as three inches (to a 13" depth) or increased by as much as three inches (to a 19" depth) so that the bottom of the curb will coincide with the top of a course of pavement substructure. No adjustment in the bid price is to be made for a reduction or an increase in depth.

Approved Revised September 2005

MOSTAFA A. SABBAH, Ph.D., P.E.
Director, Department of Engineering

4" COMBINATION CURB & GUTTER AND MEDIAN CURB

Plate 4411

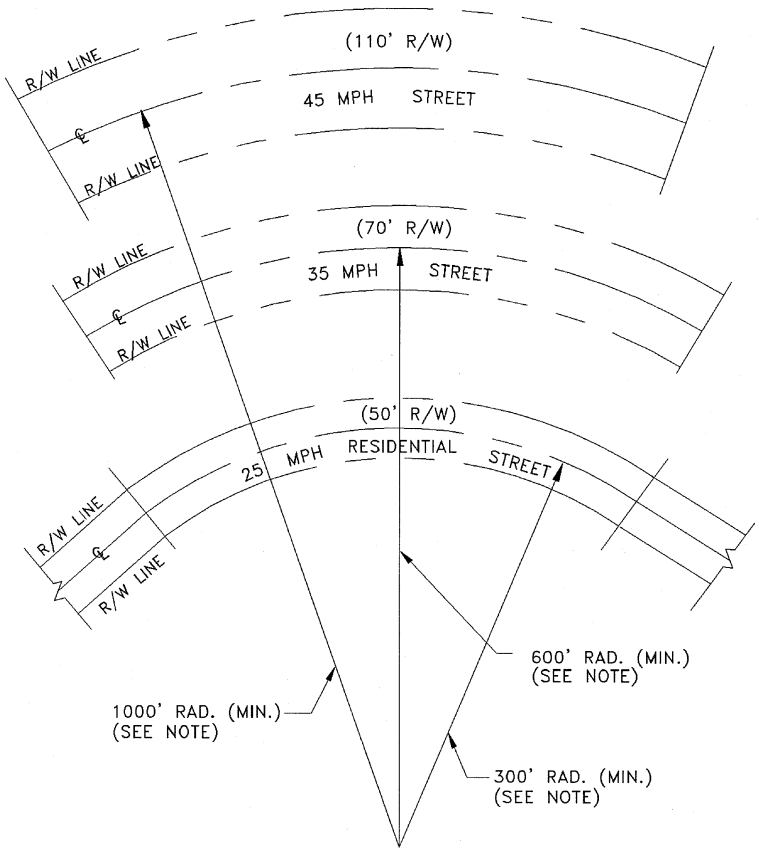

POSTED SPEED	DESIGN SPEED	CENTERLINE RADIUS
25 mph	30 mph	300' min.
30 mph	35 mph	450' min.
35 mph	40 mph	600' min.
40 mph	45 mph	750' min.
45 mph	50 mph	1,000' min.
50 mph	55 mph	1,200' min.
55 mph	60 mph	1,500' min.

NOTE: Superelevation may be used in some instances to reduce radial requirements. Any recommendations to do so shall be subject to the approval of the Director.

Approved August 1997

MOSTAFA A. SABBAH, Ph.D., P.E.
Director, Department of Engineering

STREET CENTERLINE RADII

Plate 4412

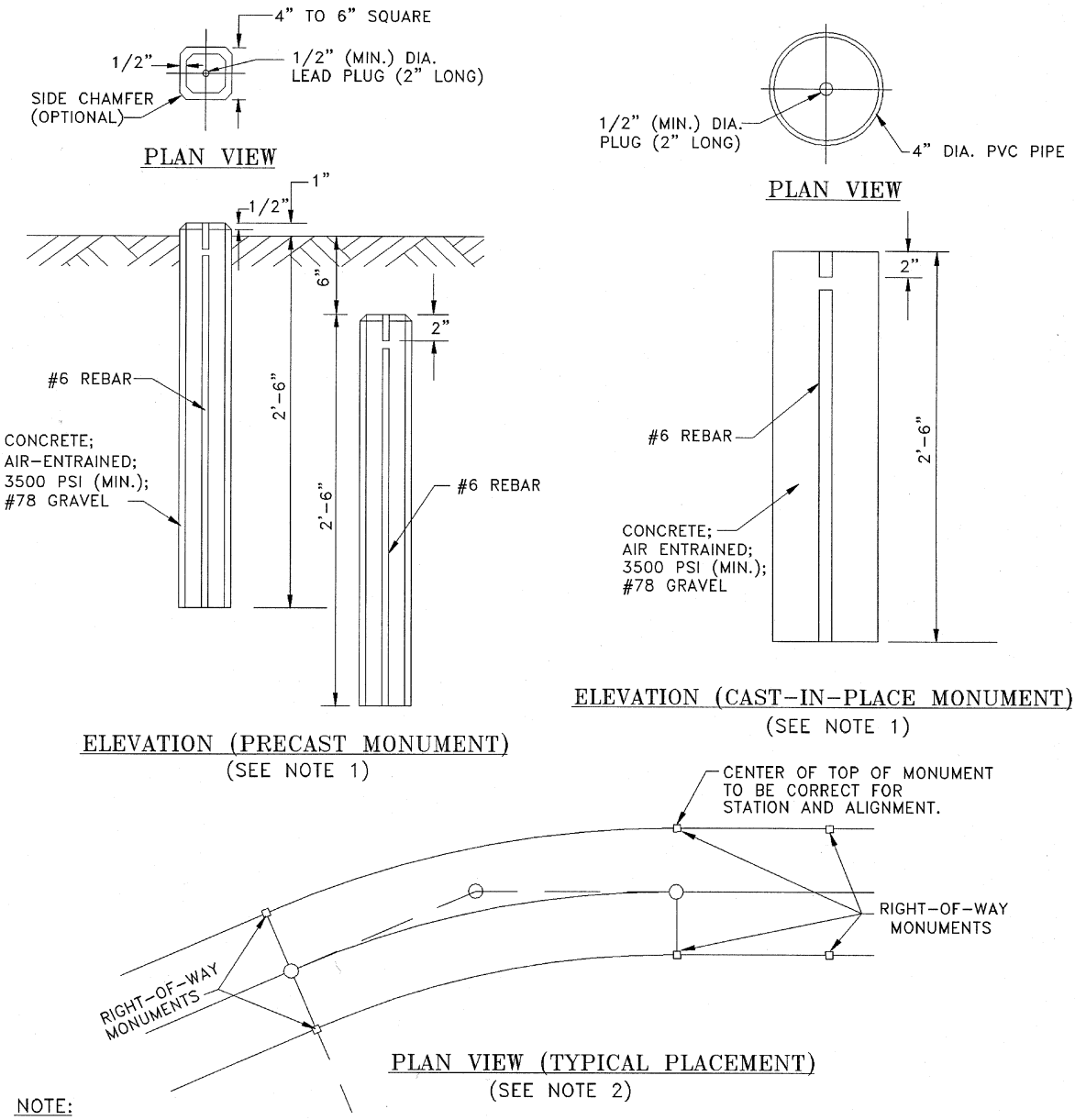

NOTE:

1. Monument to be set not more than one inch above finished grade or not more than six inches below finished grade.
2. Right-of-way monuments are to be placed at all points of curvature (P.C.) and points of tangent (P.T.) at intervals along tangents so as to be not more than 2500' apart and at all angles in the right-of-way and boundary lines.

Approved August 1997

MOSTAFA A. SABBAH, Ph.D., P.E.
Director, Department of Engineering

RIGHT-OF-WAY MONUMENTS

Plate 4413

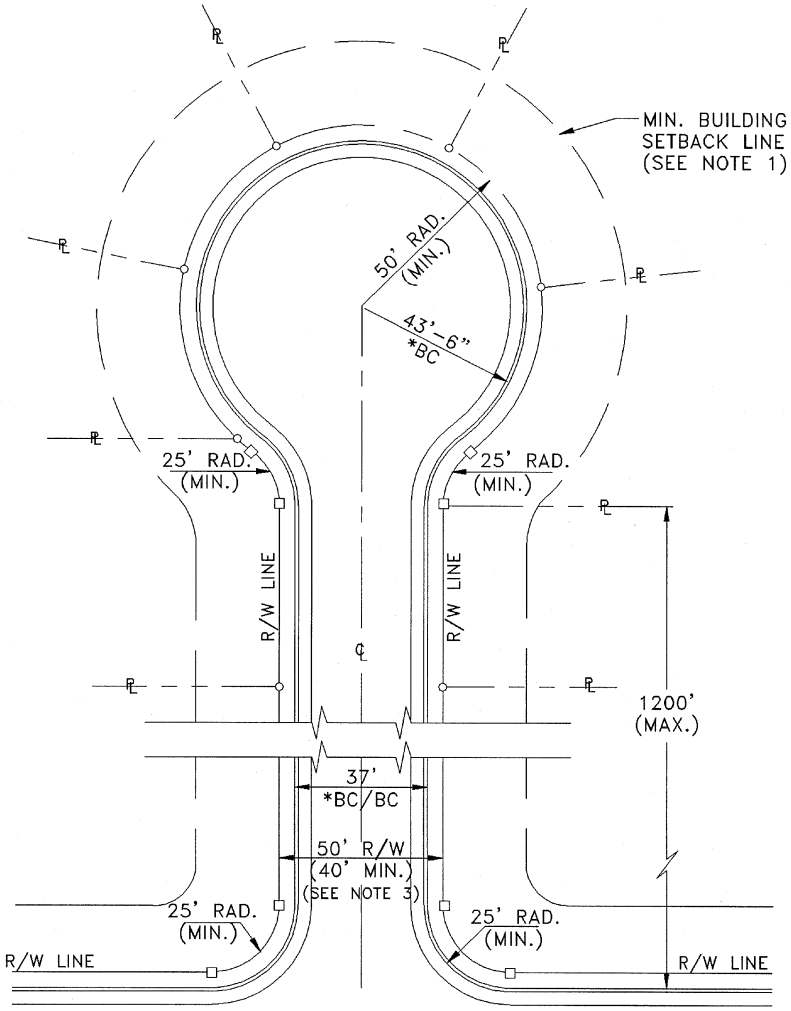

* BC = BACK-OF-CURB
** FC = FACE-OF-CURB
□ = MONUMENT

NOTES:

1. Building setback lines shall be as required by the Newport News Zoning Ordinance.
2. A dead-end cul-de-sac street shall be no longer than 600' to the turnaround unless a longer street is warranted by unusual circumstances, with a maximum of 1200' under any circumstance.
3. A 50' right-of-way is required where street length exceeds 900' or where projected average daily traffic volume at build-out exceeds 350 trips a day.

Approved August 1997

MOSTAFA A. SABBAH, Ph.D., P.E.
Director, Department of Engineering

RESIDENTIAL CUL-DE-SAC

Plate 4414

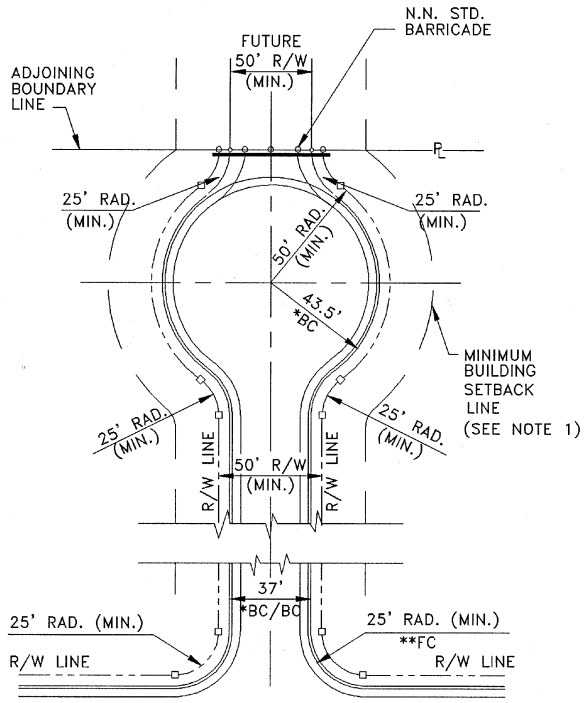

TEMPORARY TURNAROUND
AT END OF THE DEVELOPMENT

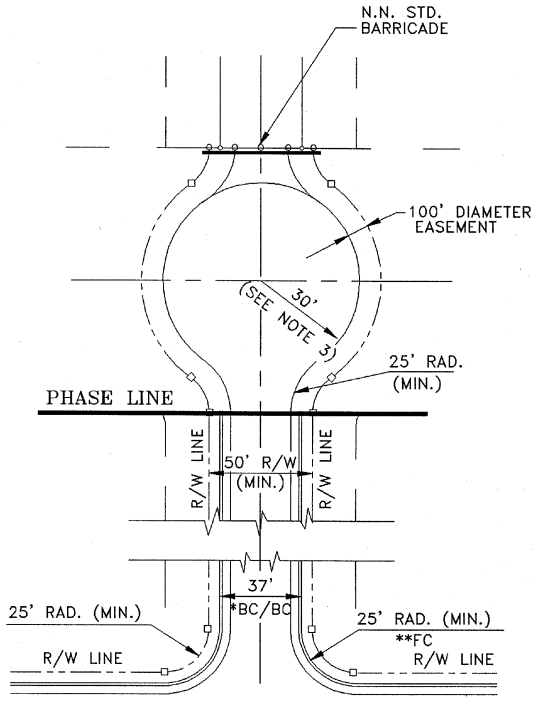

TEMPORARY TURNAROUND
FOR PHASE DEVELOPMENT

* BC = BACK-OF-CURB
** FC = FACE-OF-CURB
□ = MONUMENT

NOTES:

1. Building setback lines shall be as required by the Newport News Zoning Ordinance.
2. A future extension cul-de-sac street shall be no longer than 1200' under any circumstance.
3. A 30' radius turnaround bulb with two shots of surface treatment and eight inch crushed stone base shall be located in the next phase of development.

CORPORATION OF NEWPORT NEWS 1958 VIRGINIA

Approved August 1997

MOSTAFA A. SABBAH, Ph.D., P.E.
Director, Department of Engineering

RESIDENTIAL
CUL-DE-SAC
W/FUTURE EXTENSION

Plate 4415

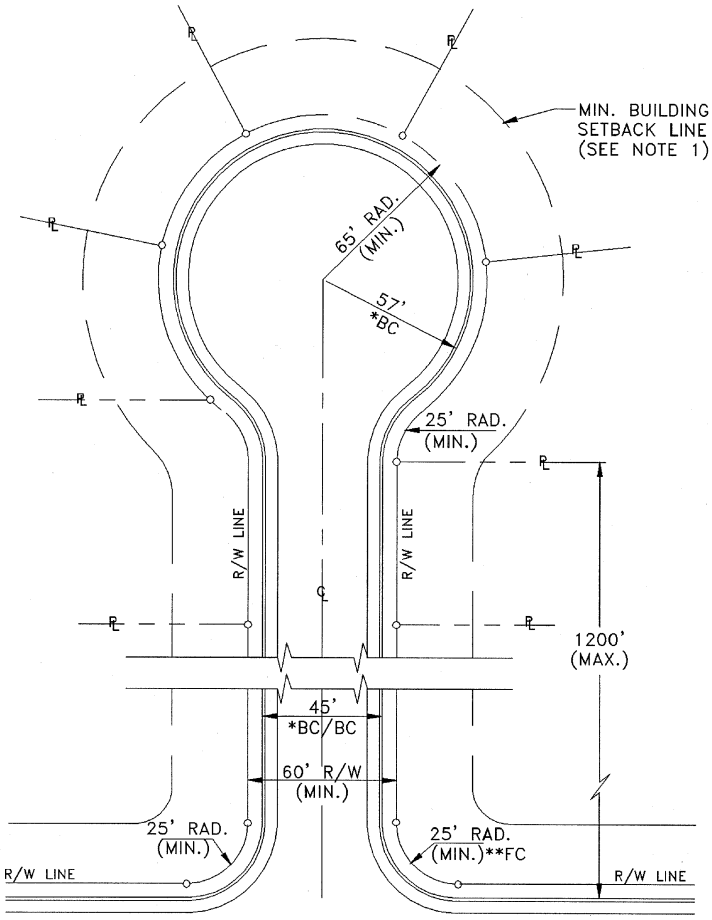

* BC = BACK-OF-CURB
** FC = FACE-OF-CURB

NOTES:

1. Building setback lines shall be as required by the Newport News Zoning Ordiance.
2. The cul-de-sac street shall be no longer than 1200 feet under any circumstance.

Approved August 1997

MOSTAFA A. SABBAH, Ph.D., P.E.
Director, Department of Engineering

COMMERCIAL
CUL-DE-SAC

Plate 4416

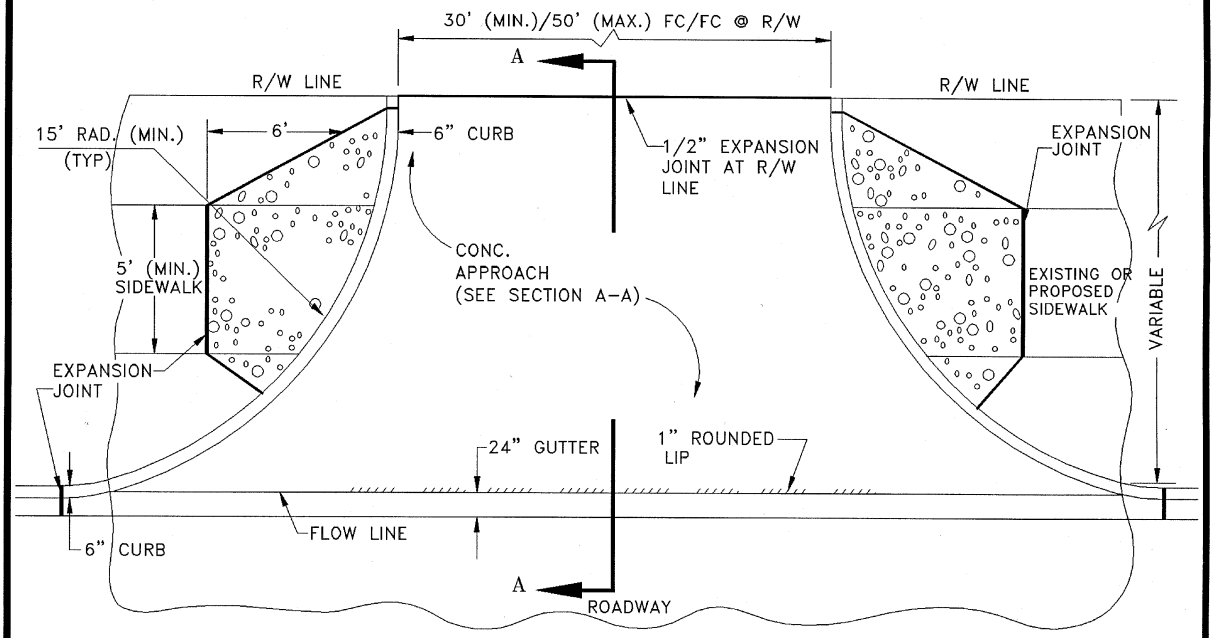

PLAN VIEW

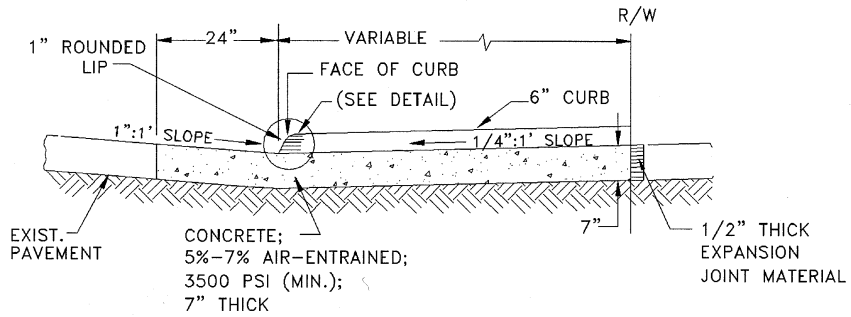

SECTION A-A

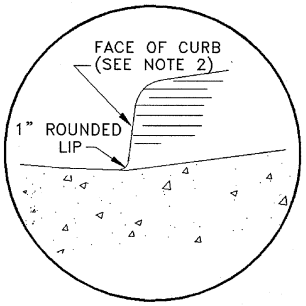

DETAIL

NOTES:

1. Concrete approach to be poured monolithically with radial curb.
2. When used in conjunction with VDOT Standard CG-3 or CG-7, the curb face on this standard is to be adjusted to match the mountable curb configuration.
3. Previous VDOT Standard CG-10A or the "metric" type entrance design shall not be used for application on commercial driveways at intersections with public streets in the City of Newport News.

Approved August 1997

MOSTAFA A. SABBAH, Ph.D., P.E.
Director, Department of Engineering

COMMERCIAL ENTRANCE (CG-10A-NN)

Plate 4417

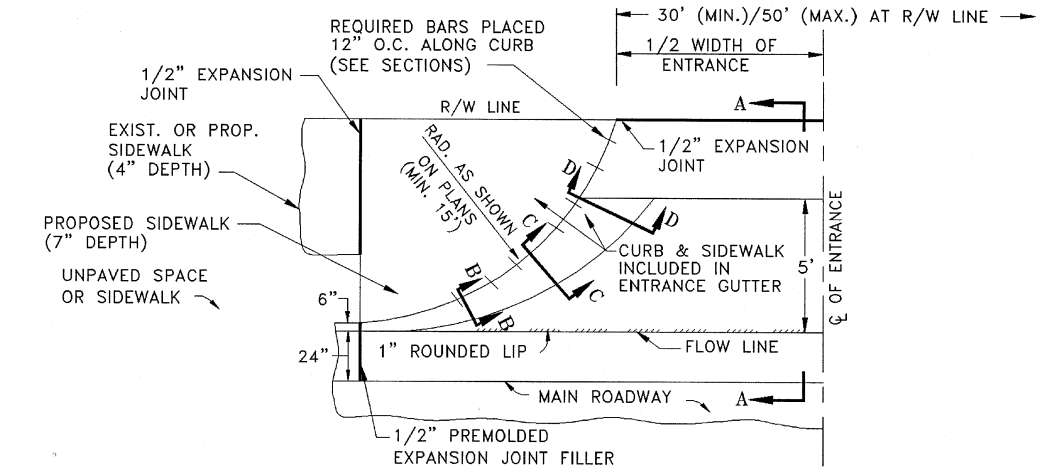

HALF-PLAN VIEW
(SYMMETRICAL ABOUT ℄)

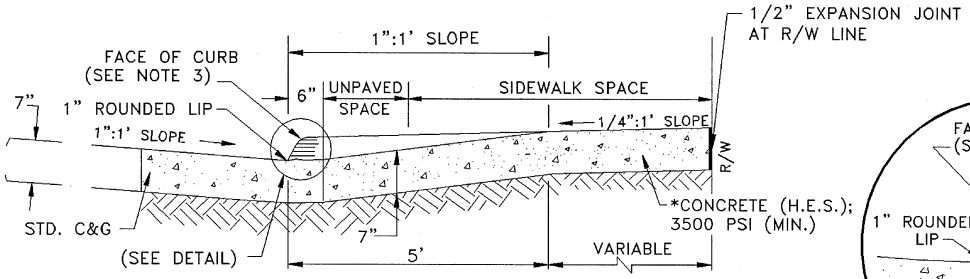

*H.E.S. = HIGH EARLY STRENGTH

SECTION A-A

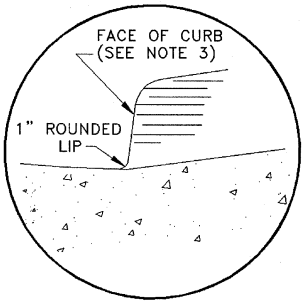

DETAIL

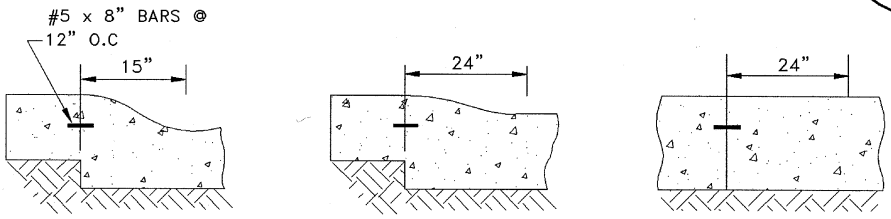

SECTION B-B SECTION C-C SECTION D-D

NOTES:

1. Proposed seven-inch thick sidewalk is to be poured monolithically with entrance. All details and dimensions not shown are the same as Plate 4419.
2. This design may also be applied to other entrance standards as the need arises.
3. When used in conjunction with VDOT Standard CG-3 or CG-7, the curb face on this standard is to be adjusted to match the mountable curb configuration.

Approved August 1997

MOSTAFA A. SABBAH, Ph.D., P.E.
Director, Department of Engineering

CORPORATION OF NEWPORT NEWS VIRGINIA

COMMERCIAL ENTRANCE (CG-13-NN)

Plate 4418

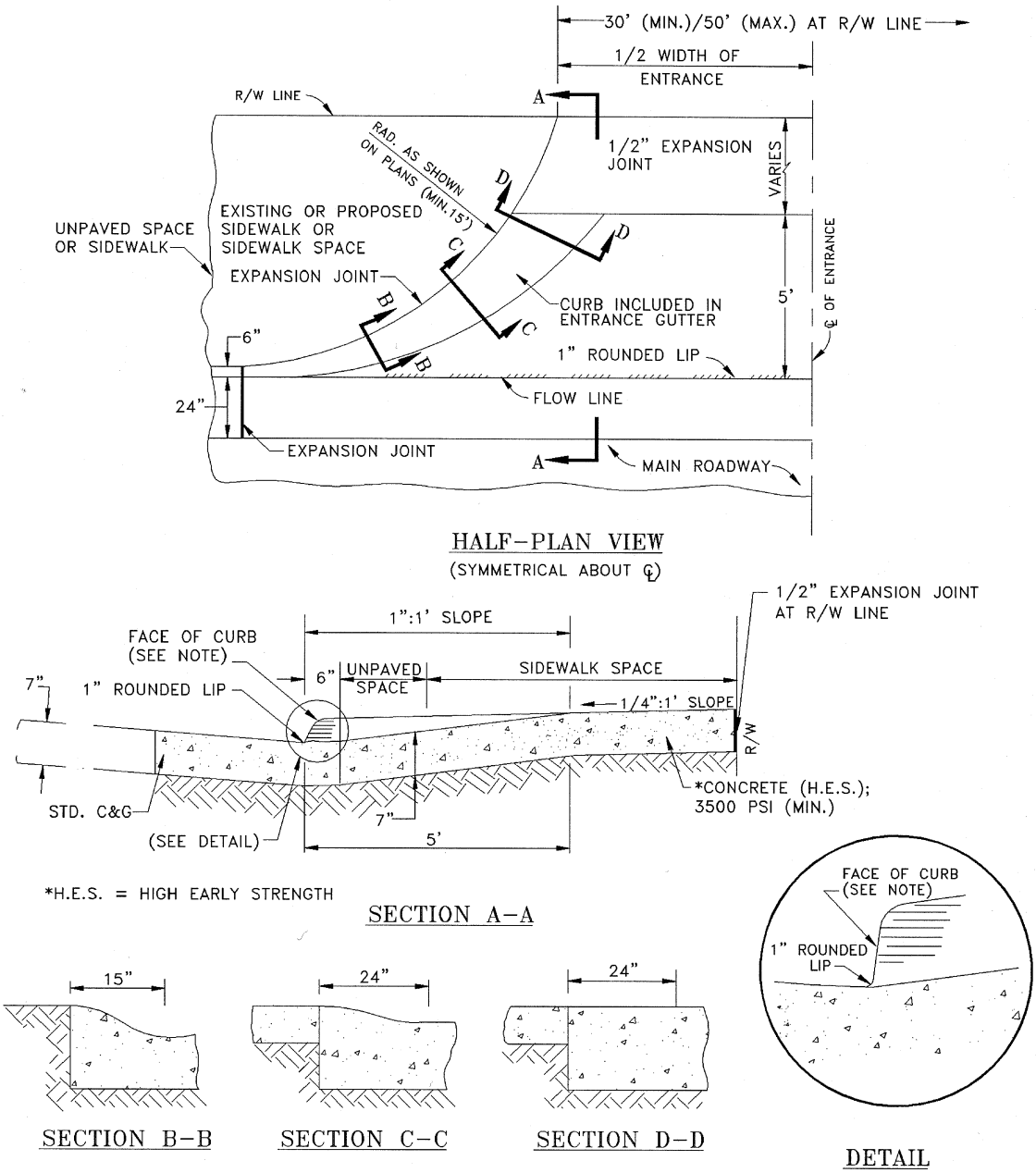

NOTE: When used in conjunction with VDOT Standard CG-3 or CG-7, the curb face on this standard is to be adjusted to match the mountable curb configuration.

Approved August 1997

MOSTAFA A. SABBAH, Ph.D., P.E.
Director, Department of Engineering

COMMERCIAL ENTRANCE (VDOT CG-9D)

Plate 4419

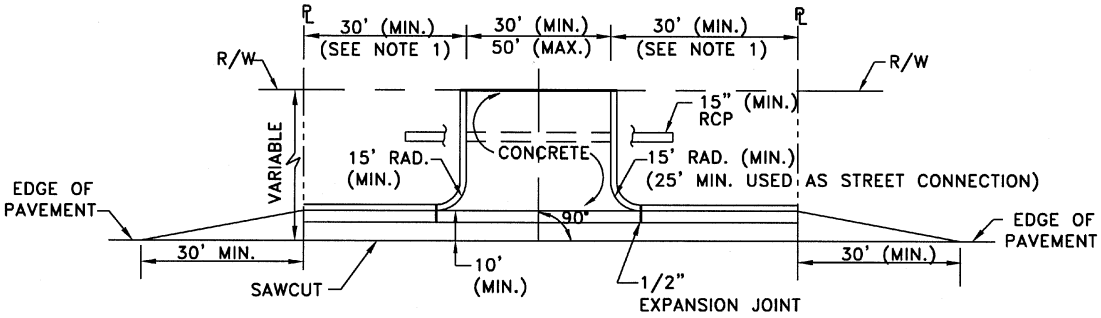

SINGLE TWO-WAY ENTRANCE PLAN VIEW

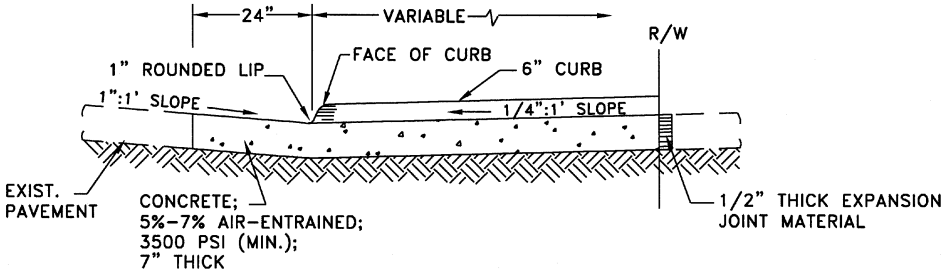

SECTION A-A CROSS-SECTION

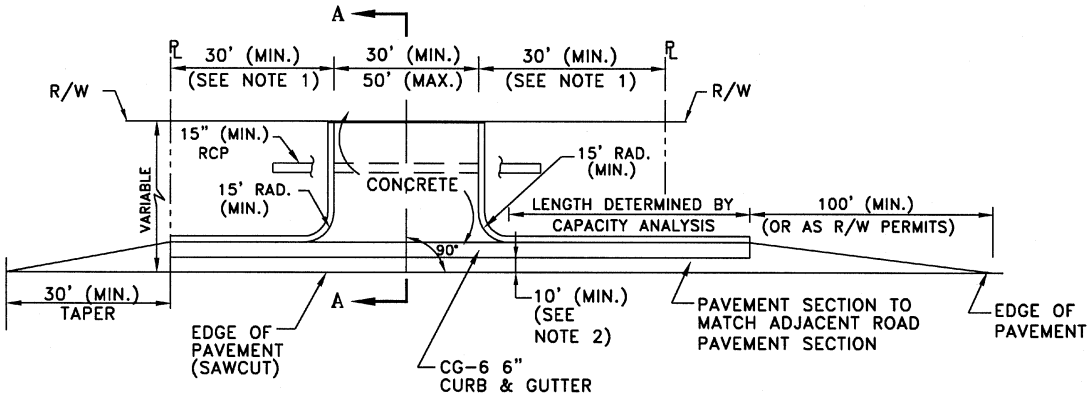

SINGLE TWO-WAY ENTRANCE WITH RIGHT TURN LANE AND TAPER PLAN VIEW

NOTE: Dimensions shall conform to the *Driveway Access Policy* contained in Chapter 4 of the Newport News *Design Criteria Manual.*

Approved August 1997

MOSTAFA A. SABBAH, Ph.D., P.E.
Director, Department of Engineering

COMMERCIAL ENTRANCE TAPER

Plate 4420

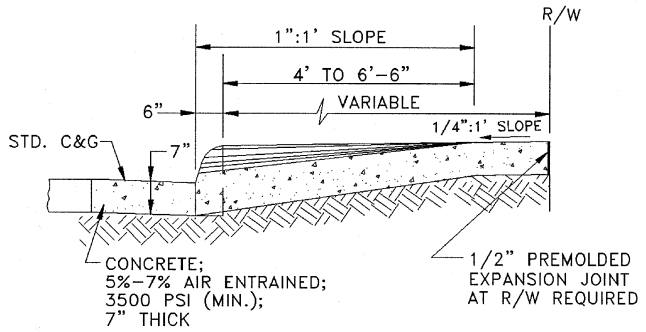

SECTION A-A

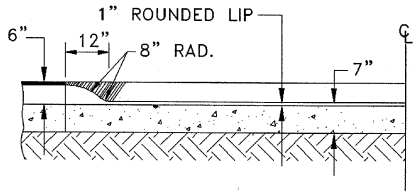

SECTION AT GUTTER LINE

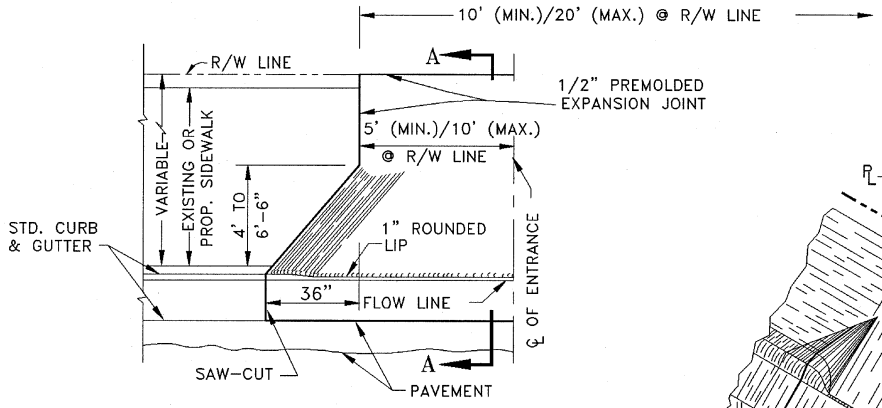

HALF-PLAN VIEW

(SYMMETRICAL ABOUT ℄ OF ENTRANCE)

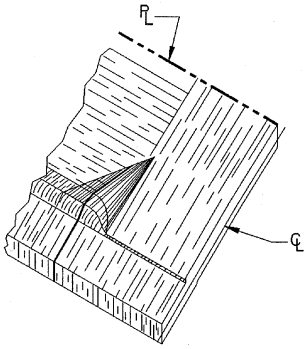

ISOMETRIC VIEW

NOTES:

1. If an existing sidewalk is affected by this installation, it must be removed and replaced with a 5%-7% air-entrained concrete section, 3500 psi, seven inches thick.
2. A slope of 1/4":1' (upward) is required from top of curb to right-of-way line, (on entrance or on sidewalk).
3. Entrances within two feet of each other, measured at the curb line, may connect to share a wider apron design.

Approved August 1997

MOSTAFA A. SABBAH, Ph.D., P.E.
Director, Department of Engineering

RESIDENTIAL CONCRETE ENTRANCE
STREETS W/CURB & GUTTER
Plate 4421

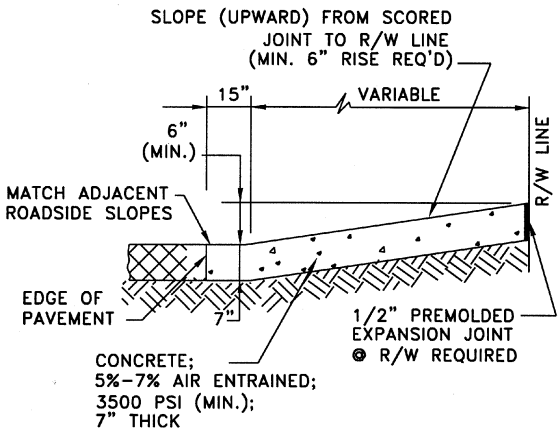

SECTION A-A

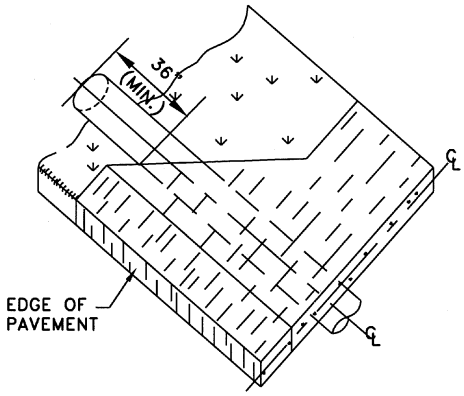

ISOMETRIC VIEW

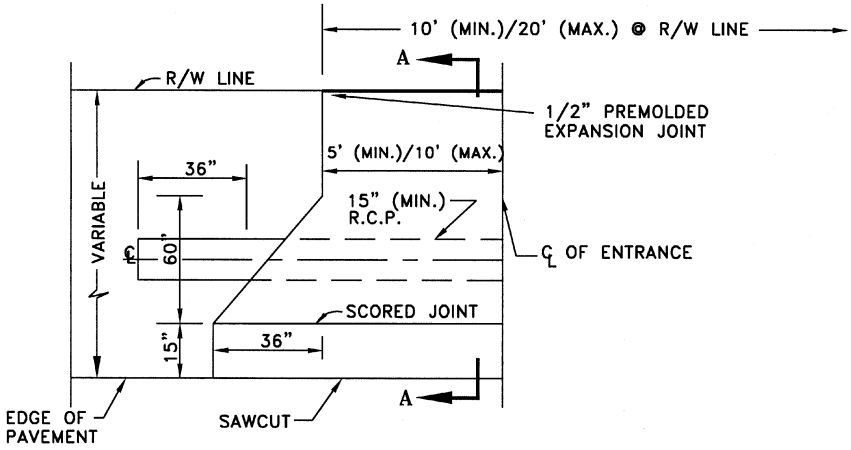

HALF-PLAN VIEW
(SYMMETRICAL ABOUT ℄)

NOTES:

1. Pipe location may vary within the right-of-way as necessary but the pipe shall be installed so as to provide and/or maintain positive drainage.
2. Pipe shall extend three feet (minimum) beyond farthest outside edge of entrance at crossing.
3. Concrete residential entrance required with concrete private driveway only.
4. Entrances within two feet of each other, measured at the edge of pavement, may connect to share a wider apron design.

Approved August 1997

MOSTAFA A. SABBAH, Ph.D., P.E.
Director, Department of Engineering

RESIDENTIAL CONCRETE ENTRANCE
STREETS W/O CURB & GUTTER
Plate 4422

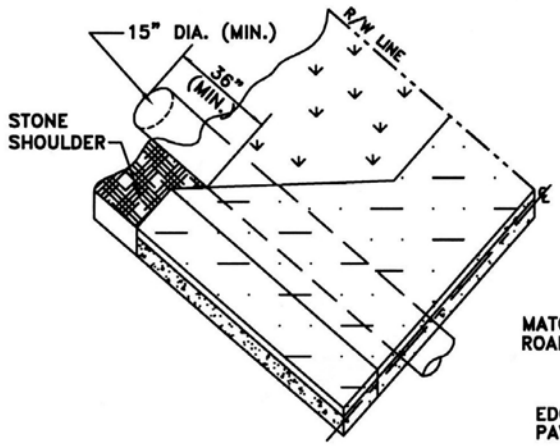

ISOMETRIC VIEW

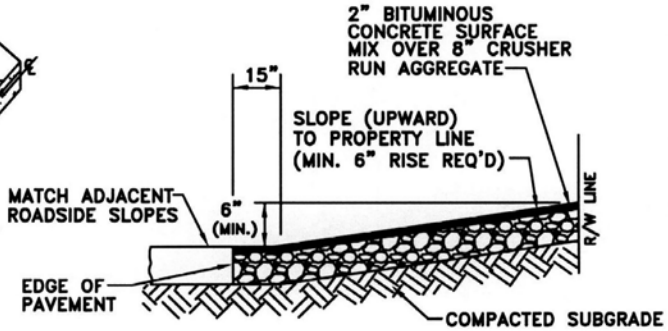

SECTION A–A

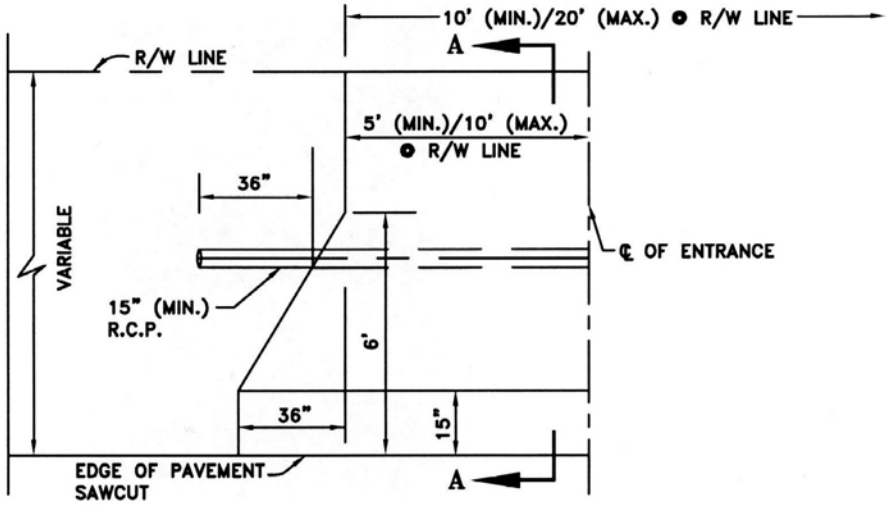

HALF–PLAN VIEW
(SYMMETRICAL ABOUT ℄ OF ENTRANCE)

NOTES:

1. Pipe location may vary within the right–of–way as necessary but the pipe shall be installed so as to provide and/or maintain positive drainage.
2. Pipe shall extend three feet (minimum) beyond farthest outside edge of entrance at crossing.

Approved Revised September 2005

MOSTAFA A. SABBAH, Ph.D., P.E.
Director, Department of Engineering

RESIDENTIAL ASPHALT ENTRANCE

STREETS W/O CURB & GUTTER

Plate 4423

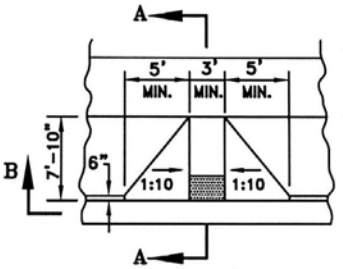

TANGENT PLAN

*7'-4" is the minimum requirement to achieve a 1:12 slope across 5' sidewalk with cross slope of 1:50 (See Note 2). If 6" curb is not used (See Note 4), 7'-4" may be reduced.

SECTION A-A

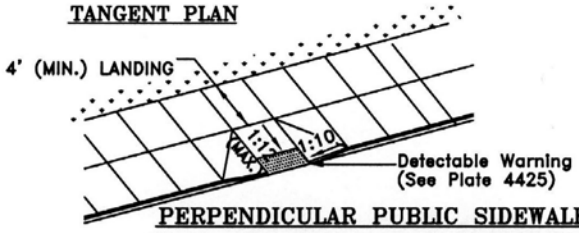

PERPENDICULAR PUBLIC SIDEWALK
CURB RAMP NOT AT INTERSECTIONS

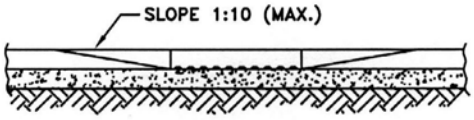

SECTION B-B

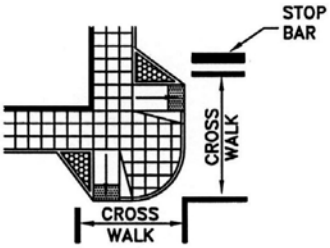

PERPENDICULAR PUBLIC SIDEWALK
CURB RAMP AT PROJECTED INTERSECTIONS

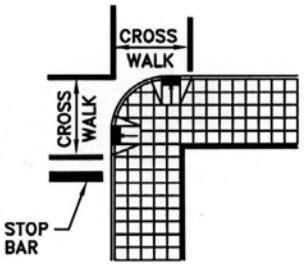

PERPENDICULAR PUBLIC SIDEWALK
CURB RAMP AT NON-PROJECTED INTERSECTIONS

NOTES:

1. Concrete shall be 5%-7% air-entrained, 3500 psi (minimum).
2. Detectable warning to be Class A-3.5 concrete (Class A-4 concrete or equivalent brick paver if precast) with slip resistant integral surface covering the full width of the ramp floor by 2 foot in length in the direction of travel. Premolded materials with the truncated dome detectable warning may be used with the approval of the Director. The cross slope of the ramp shall not exceed a 1:50 slope.
3. The detectable warning shall be provided by truncated domes. Truncated domes to be stamped if cast-in-place or precast in top surface. The color of the detectable warning section shall be a contrasting color with the adjacent surface (adjacent surfaces includes flared sides).
4. When used in conjunction with VDOT Standard CG-3 or CG-7, the curb face on this standard is to be adjusted to match the mountable curb configuration.
5. Curb cut ramps are to be located as shown on the plans <u>or</u> as required by the Director. When insufficient right-of-way prohibits the application of a perpendicular ramp, the parallel ramp design on Plate 4425 shall be selected.
6. Ramp depth to be increased to seven-inch thick concrete when placed along radial returns of street intersections or as required by the Director.
7. Above diagrams subject to current ADA regulations and requirements.

CORPORATION OF NEWPORT NEWS VIRGINIA

Approved Revised October 2005

MOSTAFA A. SABBAH, Ph.D., P.E.
Director, Department of Engineering

H/C CURB RAMP
PERPENDICULAR
NON-PARKWAY

Plate 4424

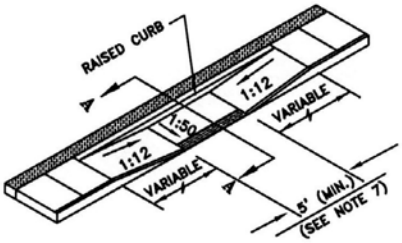

PARALLEL PUBLIC SIDEWALK CURB RAMP
(MID-BLOCK)

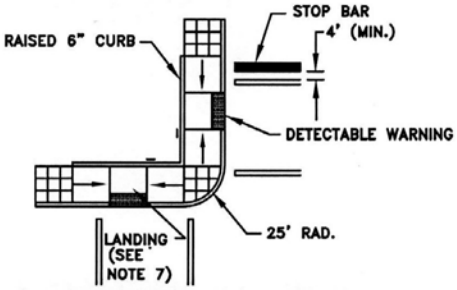

PARALLEL PUBLIC SIDEWALK CURB RAMP
IN PUBLIC SIDEWALK @ INTERSECTION

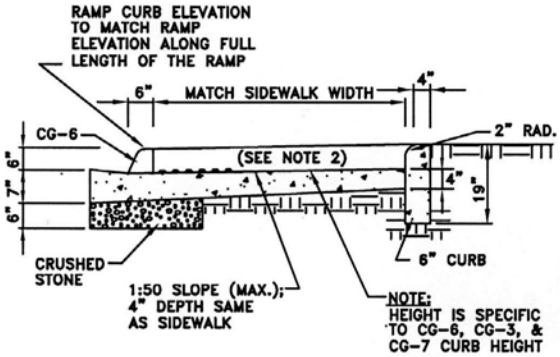

SECTION A-A

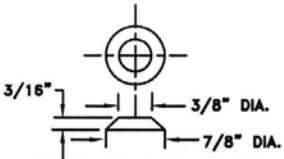

TRUNCATED DOME DETAIL

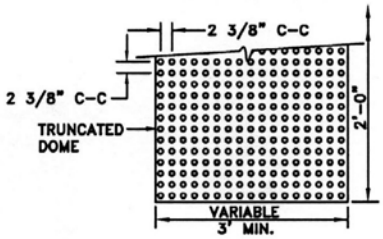

DETECTABLE WARNING DETAIL

NOTES:

1. Concrete shall be 5%-7% air-entrained, 3500 psi (minimum).
2. Detectable warning to be Class A-3.5 concrete (Class A-4 concrete or equivalent brick paver if precast) with slip resistant integral surface covering the full width of the ramp floor by 2 foot in length in the direction of travel. Premolded materials with the truncated dome detectable warning may be used with the approval of the Director. The cross slope of the ramp shall not exceed a 1:50 slope.
3. The detectable warning shall be provided by truncated domes. Truncated domes to be stamped if cast-in-place or precast in top surface. The color of the detectable warning section shall be a contrasting color with the adjacent surfaces (adjacent surfaces includes flared sides).
4. When used in conjunction with Standard CG-3 OR CG-7, the curb face on this standard is to be adjusted to match the mountable curb configuration.
5. Ramp depth to be increased to seven-inch thick concrete when placed along radial returns of street intersections or as required by the Director.
6. At marked crossings, the required landing at the bottom of the parallel public sidewalk curb ramp shall be wholly contained within the markings.
7. A landing matching the width of the parallel public sidewalk curb ramp and a minimum of five feet in length in the direction of the ramp run shall be provided at the bottom of the parallel public sidewalk curb ramp.
8. Above diagrams subject to ADA regulations and requirements.

Approved Revised October 2005

MOSTAFA A. SABBAH, Ph.D., P.E.
Director, Department of Engineering

H/C CURB RAMP
PARALLEL
NON-PARKWAY

Plate 4425

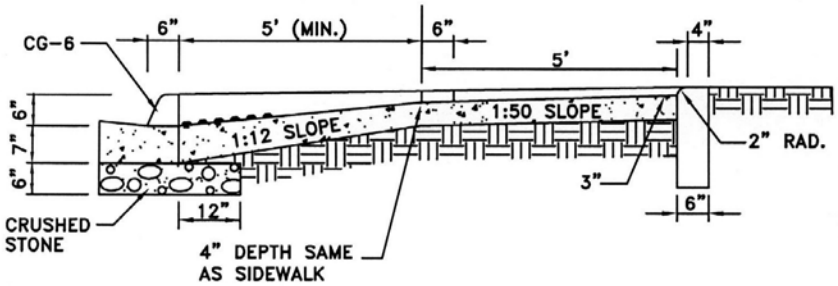

SECTION A-A

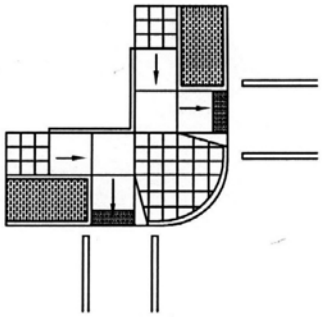

COMBINATION PUBLIC SIDEWALK CURB RAMP IN PUBLIC SIDEWALK WITH PARKWAY

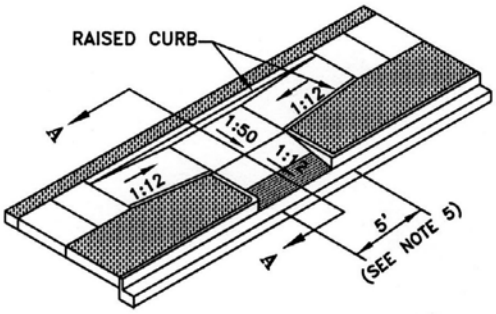

COMBINED (PARALLEL/PERPENDICULAR) PUBLIC SIDEWALK CURB RAMP

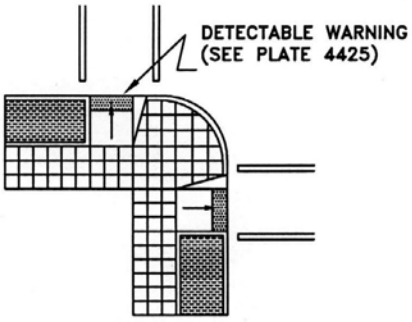

PERPENDICULAR PUBLIC SIDEWALK CURB RAMP IN PUBLIC SIDEWALK WITH PARKWAY

NOTES:

1. Concrete shall be 5%-7% air-entrained, 3500 psi (minimum).
2. Detectable warning to be Class A-3.5 concrete (Class A-4 concrete or equivalent brick paver if precast) with slip resistant integral surface covering the full width of the ramp floor by 2 foot in length in the direction of travel. Premolded materials with the truncated dome detectable warning may be used with the approval of the Director. The cross slope of the ramp shall not exceed a 1:50 slope.
3. The detectable warning shall be provided by truncated domes. Truncated domes to be stamped if cast-in-place or precast in top surface. The color of the detectable warning section shall be a contrasting color with the adjacent surfaces (adjacent surfaces includes flared sides).
3. When used in conjunction with VDOT Standard CG-3 or CG-7, the curb face on this standard is to be adjusted to match the mountable curb configuration.
4. Ramp depth to be increased to seven-inch thick concrete when placed along radial returns of street intersections or as required by the Director.
5. Where parallel/perpendicular public sidewalk curb ramps are combined to serve a street crossing not at an intersection, the four-foot minumum landing required for the perpendicular public sidewalk curb ramp is displaced by the landing the width of the sidewalk.
6. Above diagrams subject to current ADA regulations and requirements.

Approved Revised October 2005

MOSTAFA A. SABBAH, Ph.D., P.E.
Director, Department of Engineering

H/C CURB RAMP
PARKWAY SETBACK

Plate 4426

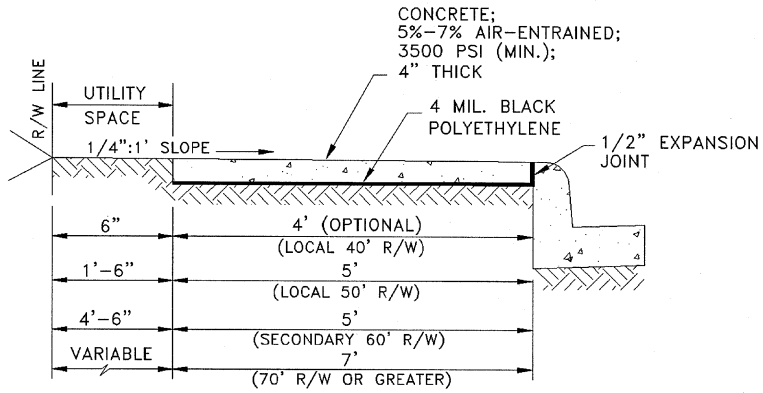

SIDEWALK (AGAINST BACK OF CURB)

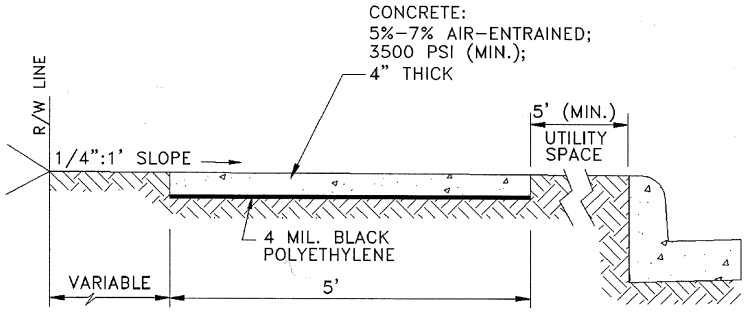

SIDEWALK WITH FIVE–FOOT WIDE GRASS STRIP

NOTES:

1. Sidewalk depth may vary with VDOT Standard CG–12, CG–13, and with handicap ramp at commercial entrance or street connection, where applicable.
2. There shall be crack control joints every five feet and at every 30' there shall be transverse expansion joints.
3. All sidewalks shall be laid on 4 mil. black polyethylene.
4. Widths that are shown are minimum widths.

Approved August 1997

MOSTAFA A. SABBAH, Ph.D., P.E.
Director, Department of Engineering

SIDEWALK
(CROSS–SECTION)

Plate 4427

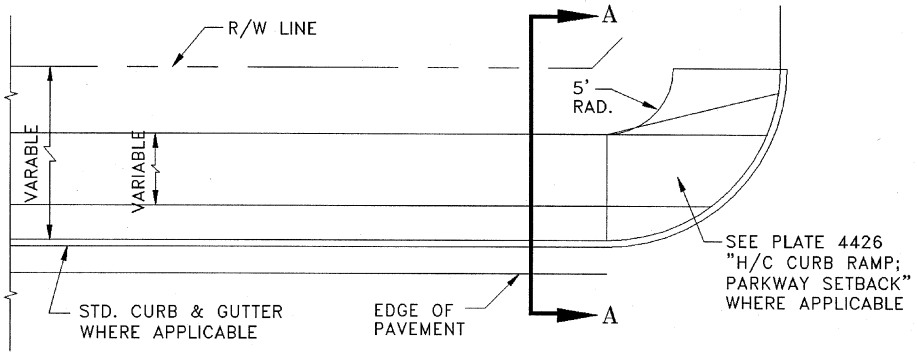

BIKEPATH PLAN VIEW

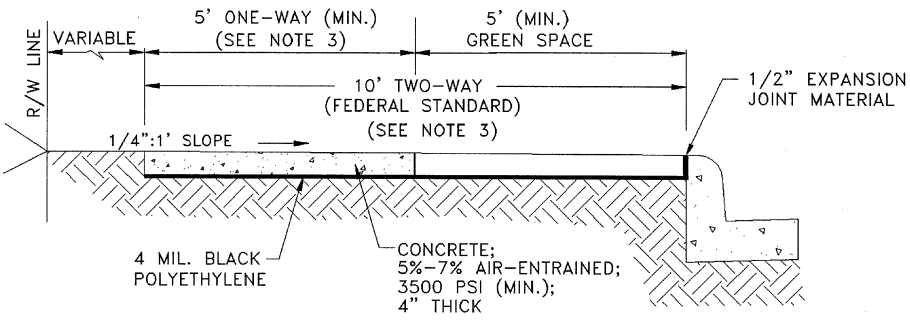

SECTION A-A

NOTES:

1. Use plate 4424, 4425, or 4426, as appropriate, at all street intersections and commercial entrances.
2. Bikepath application shall be considered other than directly behind curb and gutter, where practical.
3. A five-foot one-way bikepath has limited applications because pedestrians will also utilize this facility. Where approved by the Director, the two-way bikepath may be reduced to eight feet (minimum) outside public rights-of-way on ingress/egress easements.
4. There shall be crack control joints every five feet and at every 30' there shall be transverse expansion joints.
5. Where approved by the Director, the bikepath alignment may meander around underground utilities. An offset of one foot (minimum) is required adjacent to all utility poles, pedestals, transformers, etc.

Approved August 1997

MOSTAFA A. SABBAH, Ph.D., P.E.
Director, Department of Engineering

BIKEPATH

Plate 4428

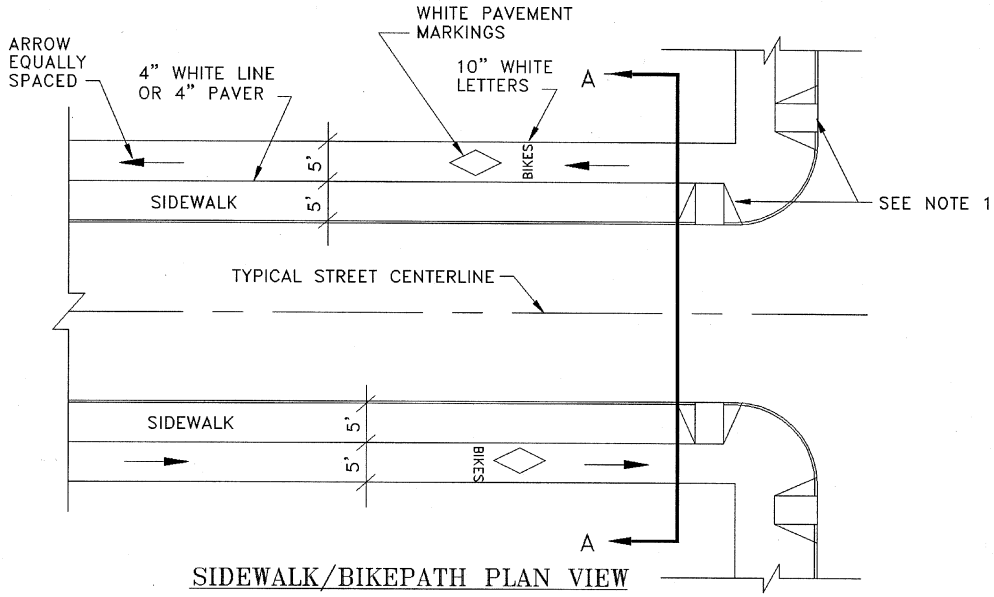

SIDEWALK/BIKEPATH PLAN VIEW

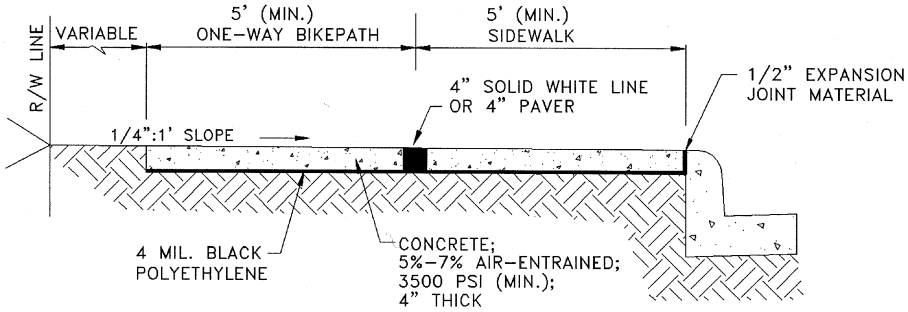

SECTION A-A

NOTES:

1. Use plate 4424, 4425, or 4426, as appropriate, at all street intersections and commercial entrances.
2. There shall be crack control joints every five feet and at every 30' there shall be transverse expansion joints.

Approved August 1997

MOSTAFA A. SABBAH, Ph.D., P.E.
Director, Department of Engineering

COMBINATION SIDEWALK/BIKEPATH ONE-WAY DESIGN (BOTH SIDES OF STREET)

Plate 4429

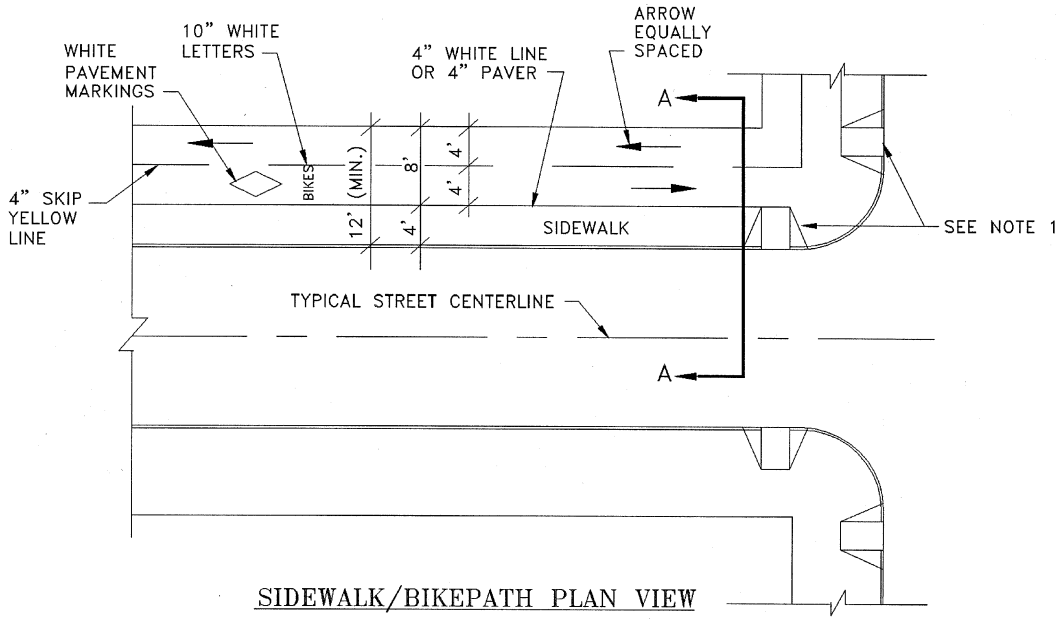

SIDEWALK/BIKEPATH PLAN VIEW

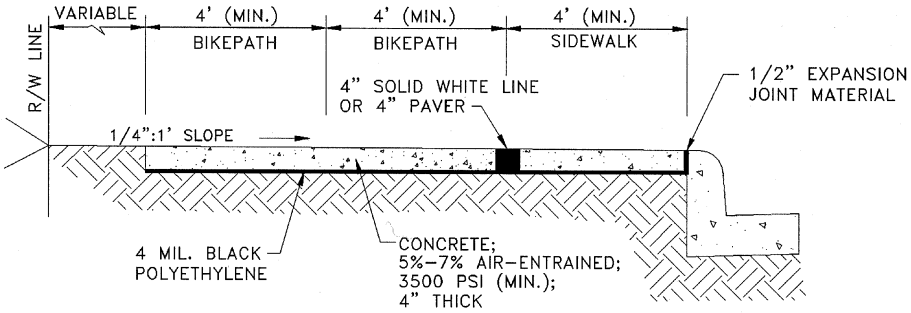

SECTION A-A

NOTES:

1. Use plate 4424, 4425, or 4426, as appropriate, at all street intersections and commercial entrances.
2. There shall be crack control joints every five feet and at every 30' there shall be transverse expansion joints.

Approved August 1997

MOSTAFA A. SABBAH, Ph.D., P.E.
Director, Department of Engineering

COMBINATION SIDEWALK/BIKEPATH TWO-WAY DESIGN (ONE SIDE OF STREET)

Plate 4430

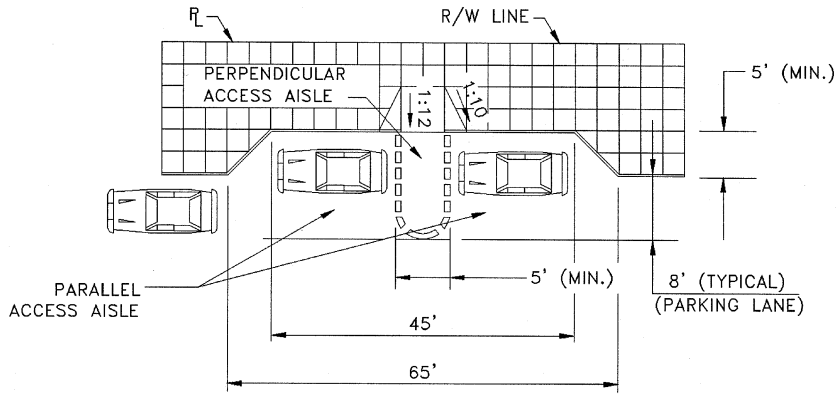

DOUBLE ACCESSIBLE PARKING SPACE WITH PERPENDICULAR PUBLIC SIDEWALK CURB RAMP

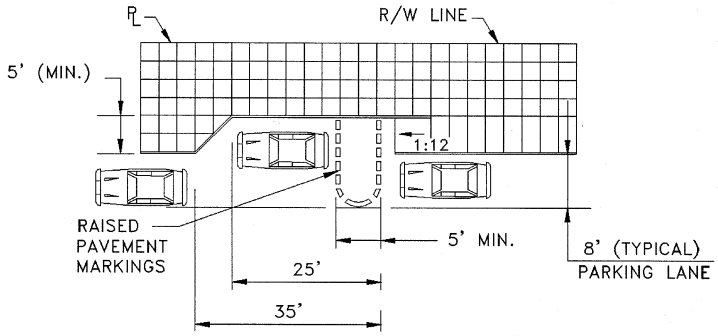

SINGLE ACCESSIBLE PARKING SPACE WITH PARALLEL PUBLIC SIDEWALK CURB RAMP

NOTES:

1. Minimum accessible stall dimension shall be 13' wide x 20' long.
2. Two adjoining accessible parking stalls may share a single five-foot (minimum) width perpendicular access aisle.
3. The adjacent parking lane shall not encroach on either the perpendicular access aisle or the parallel access aisle. Exception: Where the width of the public right-of-way between the back-of-curb and the property line is less than 12', the minimum five-foot parallel access aisle is not required.
4. The maximum running slope of any public sidewalk curb ramp shall be 1:12. The maximum cross slope of any public sidewalk curb ramp shall be 1:50.
5. Above diagrams subject to current ADA regulations and requirements.

Approved August 1997

MOSTAFA A. SABBAH, Ph.D., P.E.
Director, Department of Engineering

ACCESSIBLE PARALLEL ON-STREET PARKING SPACES

Plate 4431

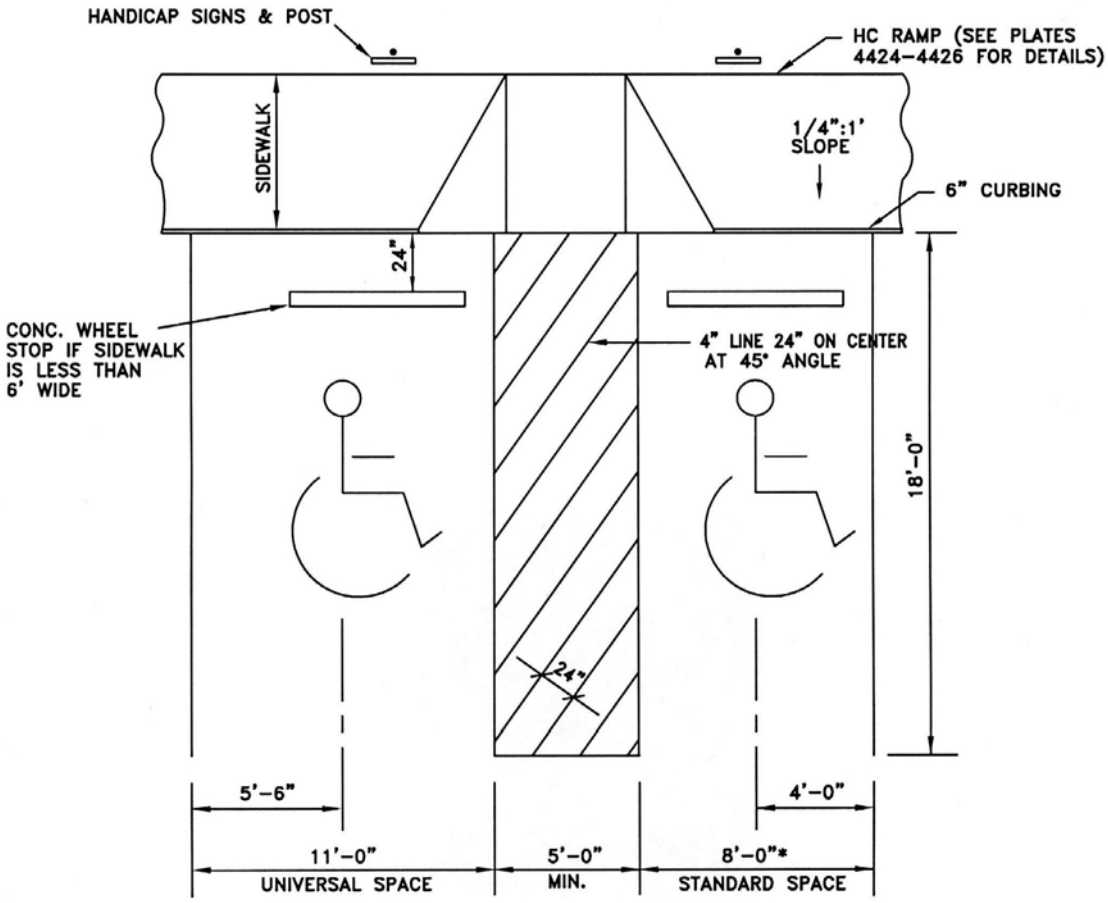

*SPACES ARE TO BE DIMENSIONED TO CENTER OF STALL LINE MARKINGS.

NOTE:

1. Above diagram subject to current ADA regulations and requirements.
2. Modifications subject to Director's approval.
3. Handicap signage shall comply with MUTCD & State Regulations for fabrication and installation.
4. Handicapped Parking spaces shall be delineated by 4" blue lines (Bennette's Paint Blue Wave Q13–28T or equivalent).

Approved Revised October 2005

MOSTAFA A. SABBAH, Ph.D., P.E.
Director, Department of Engineering

UNIVERSAL & STANDARD HANDICAP PARKING SPACE (OFF–STREET)

Plate 4432

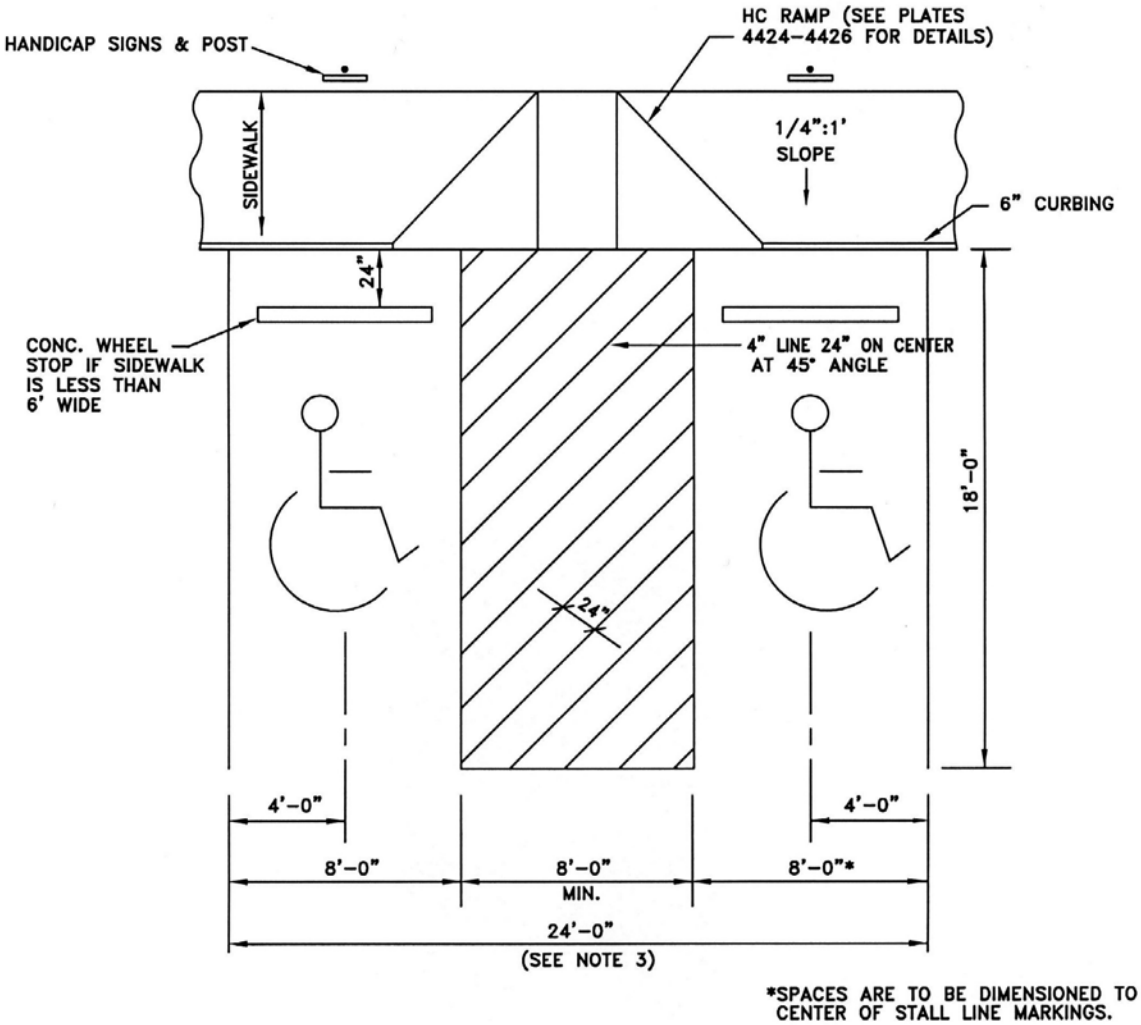

NOTE:

1. Handicap signage shall comply with MUTCD & State Regulations for fabrication and installation.
2. Above diagram subject to current ADA regulations and requirements.
3. The 8'–8'–8' dimension may be replaced by the alternate "Universal" stall design of 11'–5'–11' as defined by the ADA regulations.
4. Handicapped Parking spaces shall be delineated by 4" blue lines (Bennette's Paint Blue Wave Q13–28T or equivalent).

Approved Revised October 2005

MOSTAFA A. SABBAH, Ph.D., P.E.
Director, Department of Engineering

VAN ACCESSIBLE HANDICAP PARKING SPACE (OFF–STREET)

Plate 4433

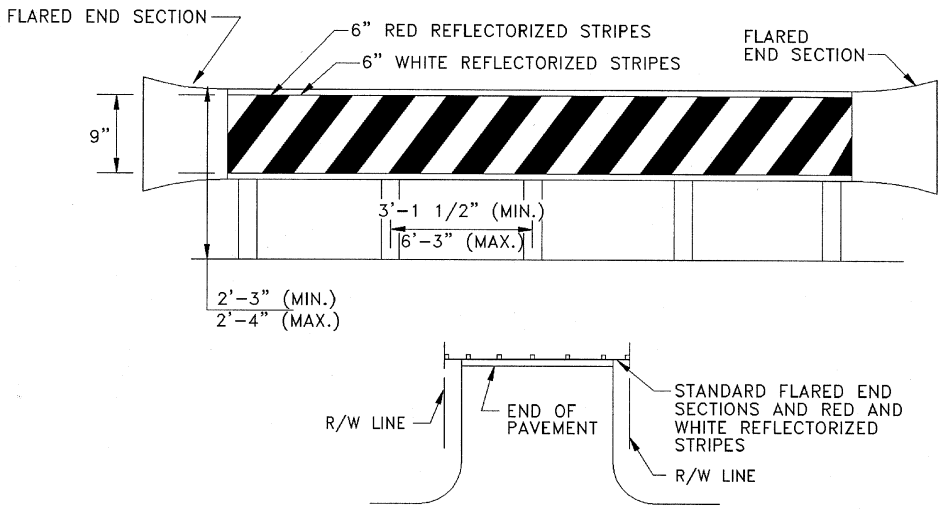

DEAD-END STREET BARRICADE
(SEE NOTES 1, 2, AND 3)

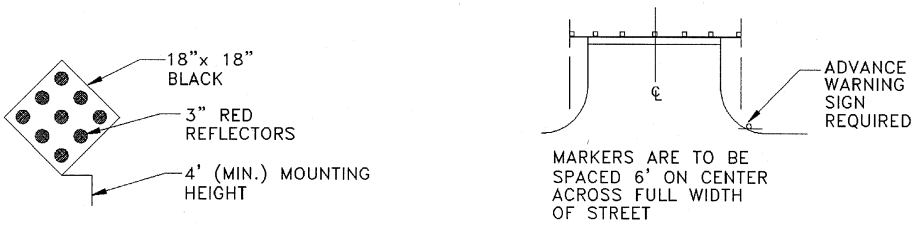

DEAD-END STREET OBJECT MARKERS
(SEE NOTES 3 AND 4)

NOTES:

1. Dead-end street barricades shall be constructed of guardrail conforming to VDOT Standard GR-2. Flared end sections shall be installed on the ends of the guardrail sections.
2. Reflective sheeting to be installed on 32" long (maximum) aluminum panels.
3. Selection of "Barricade" versus "Object Marker" end treatment shall be based on whichever provides adequate safety warning, however the placement of guardrail shall not result in a more hazardous condition than would exist without the presence of a guardrail "Barricade."
4. W14-1 (30" x 30") diagonal "Dead-End" sign or W14-1P (36" x 36") directional "Dead-End" advance warning signs shall be used in conjunction with the "Object Marker" design.

Approved August 1997

MOSTAFA A. SABBAH, Ph.D., P.E.
Director, Department of Engineering

DEAD-END STREET TREATMENTS

Plate 4434

CHAPTER 5
PUBLIC BUILDINGS

5.0 GENERAL **5-1**
5.0.1 Registration, license required 5-1
5.0.2 Objective 5-1
5.1 SPECIFICATIONS **5-2**
5.1.1 Substitutions 5-2
5.1.2 Item selection 5-2
5.1.3 Materials/Methods 5-2
5.1.4 Compliance 5-2
5.2 SITE WORK **5-2**
5.2.1 Drawings and specifications 5-2
5.2.2 Foundations 5-3
5.3 CONCRETE **5-3**
5.3.1 Design responsibility 5-3
5.3.2 Requirements 5-3
5.4 MASONRY **5-4**
5.4.1 Waterproofing 5-4
5.4.2 Mortar 5-4
5.4.3 Accessories 5-4
5.5 METALS **5-4**
5.6 CARPENTRY **5-4**
5.6.1 Framing 5-4
5.6.2 Trusses 5-5
5.7 ROOFING **5-5**
5.7.1 Guarantee 5-5
5.7.2 Drainage 5-5
5.7.3 Accessories 5-5
5.7.4 Materials 5-5
5.8 DOORS AND WINDOWS **5-5**
5.8.1 Doors 5-5
5.8.2 Windows 5-5
5.8.3 Glazing 5-6
5.8.4 Hardware 5-6
5.9 FINISHES **5-6**
5.10 MECHANICAL **5-6**
5.10.1 Plumbing 5-6
5.10.2 Mechanical and refrigeration 5-6
5.11 ELECTRICAL **5-6**
5.12-5.99 (Reserved)

There are no illustrations for Chapter 5

Chapter 5

PUBLIC BUILDINGS

5.0 GENERAL

5.0.1 **Registration, license required**. Relationships between owner and designer shall be as set forth in the basic agreement between the City of Newport News and the designer. The designer and the project team head, including the architect, civil engineer, electrical engineer, mechanical engineer and land surveyor, shall be registered professionals licensed to practice in Virginia.

5.0.2 **Objective**. The City objective is to construct buildings that are aesthetically attractive, in harmony with the surrounding environment and functionally planned to pleasantly and efficiently fulfill intended requirements. The designer shall exercise his or her best professional judgment in achieving these aims but shall at all times work in recognition of the budget set forth by the City and as required by the Director.

a. All designs shall be within restraints provided by this manual, pertinent City ordinances and policies, and the Virginia Uniform Statewide Building Code (VUSBC).

b. The City will be responsible for identifying and abating, as necessary, hazardous materials (such as asbestos materials and lead-based paint) and removing underground storage tanks prior to demolition and renovation projects.

5.1 SPECIFICATIONS

5.1.1 Substitutions. All specifications shall be written such that products equal to those specified may be substituted, except where determined by the Director that only one product is suitable or in the best interests of the City. The Director shall determine whether a product is deemed "equal."

5.1.2 Item selection. Designers shall design on the basis of stock items wherever possible. If custom-built items are required, that fact shall be clearly stated in the specifications.

5.1.3 Materials/Methods. Where materials and methods are specified by a standard specifications designation, such designation shall be that of a nationally recognized, independent organization, to include but not be limited to ACI, ASTM, AISC, S.D.I., ANSI, AWI, NFPA, ASHRAE, SMACNA, NEC, NEMA, UL and ASME.

5.1.4 Compliance. All buildings and sites shall comply with the design guidelines related to the Americans with Disabilities Act (ADA) for Title II groups.

5.2 SITE WORK

5.2.1 Drawings and specifications:

a. All information needed to convey the intent of the design (such as rights-of-way, elevations, reference points, site boundaries, utilities, etc.) shall be indicated on the drawings. A copy of the survey shall be provided to the Director.

b. Provisions for erosion and sediment control and site stormwater management facilities shall be included in the specifications, be clearly marked on the drawings, and be in accordance with this manual, the pertinent chapter of the *Newport News City Code*, and the City *Standard Specifications*.

c. All streets and parking areas shall be specified and designed in accordance with applicable City of Newport News requirements, such as this manual, City *Standard Specifications*, and current policies and ordinances as determined by the Director.

5.2.2 Foundations:

a. A subsurface investigation shall be performed, unless waived by the Director, for all building construction projects to establish foundation design requirements. The investigation shall be by a qualified, licensed independent testing laboratory. A copy of the data shall be provided to the Director.

b. The design shall specify that primary foundations are to be placed on undisturbed earth or special foundations, such as pilings or caissons, unless otherwise required or approved by the Director.

c. Where pilings are deemed necessary, the utilization of either salt-treated timber, precast prestressed concrete, cased driven shell concrete, or steel "H" or pipe piles is recommended. When specifying salt-treated timber, the minimum concentration specified shall be 2.5#/ft^3 for any use.

5.3 CONCRETE

5.3.1 Design responsibility. Where the design is to be of precast prestressed concrete, the designer shall show on the drawings the complete design of all members and a complete table of all structural members tabulating the moments and shears resulting from proper application of the design loads to the members. Detailed designs and calculations shall be submitted. The designer shall be responsible for that design and shall review and approve the design and shop drawings.

5.3.2 Requirements:

a. Concrete shall be designed to a compressive strength of 3500 psi as a minimum. High strength concrete can be used as deemed appropriate by the designer, but the decision to use this product shall be made after consultation with the Director. Higher strength concrete shall require that structural members perform satisfactorily under fatigue and high-stress levels.

b. All reinforced concrete structures shall be designed according to ACI recommendations unless modifications are required by the Director.

c. Specifications on placing concrete during cold weather shall be based on ACI-306, with the following exception to be noted on the drawings:

> ***Exception: In addition to laboratory-cured test specimens, concrete test specimens shall be cured under field conditions.***

d. The use of lightweight aggregates for structural concrete shall be restricted to aggregates that meet the requirements of ASTM C-330, Type II.

e. Concrete shall be batched and mixed in accordance with ASTM C-94, and all concrete testing shall be performed by a laboratory that meets the requirements of ASTM E-329.

5.4 MASONRY

5.4.1 **Waterproofing**. Exterior masonry shall be designed with particular attention toward waterproof construction. Flashings shall be clearly detailed on the drawings.

5.4.2 **Mortar**. Mortar shall be Portland Cement, lime and sand with a plasticizing admixture.

5.4.3 **Accessories**. All accessories (such as ties, reinforcing materials, etc.) shall comply with applicable codes and standards.

5.5 METALS

All steel structures shall be designed in accordance with AISC specifications.

5.6 CARPENTRY

5.6.1 **Framing**. Where laminated or heavy timber framing is used, the design shall allow access to portions of the timber for inspection and maintenance. All primary members in heavy timber construction shall be of fire- and decay-resistant treated timber. The timber shall not be exposed to weather.

5.6.2 **Trusses**. Where wood trusses are used for roof construction, the use of pressed-in, nail-type truss plates in accordance with Truss Plate Institute standards is allowed for spans up to and including 35 feet. When spans exceed 35 feet, the designer shall specify a more flexible type connector consisting of split rings or shear plates.

5.7 ROOFING

5.7.1 **Guarantee**. All low-slope roofing systems used shall be fully warranted and bonded by the manufacturer for 15 years.

5.7.2 **Drainage**. Roof drainage shall be clearly specified and detailed on the drawings.

5.7.3 **Accessories**. All roofing systems shall include all flashings and accessories needed to provide a fully watertight surface.

5.7.4 **Materials**. Materials for low-slope roofing shall be a single-ply system by a manufacturer as approved by the Director. High-slope roofing shall be fiberglass shingles, slate, metal or a similarly approved material.

5.8 DOORS AND WINDOWS

5.8.1 **Doors**. Special door systems shall be by manufacturers qualified for such work. Wooden doors shall comply with Section 1300 of the current AWI Manual. Steel doors shall comply with S.D.I.-100, and steel frames shall meet applicable criteria as follows:

a. Hot-rolled, pickled and oiled per ASTM A-568 and A-569.

b. Cold-rolled per ASTM A-366 and A-568.

c. Galvanized sheets per ASTM A-525 with ASTM A-526, G-60 zinc coating, mill phosphatized.

5.8.2 **Windows**. Aluminum windows shall comply with ANSI A-302.9. Special windows shall comply with accepted standards of the industry.

5.8.3 Glazing. Glazing shall comply with federal specification (FS) DD-G-451 for prime, non-processed glass; FS DD-G-1403 for heat-treated glass; 16 CFR 1201 for CPSC safety glass; and ANSI Z-97.1 for ANSI safety glass.

5.8.4 Hardware. All hardware shall be by a nationally recognized manufacturer and shall be listed in a complete hardware schedule; no federal specification numbers will be accepted. All keying systems shall be a master, grand master approved by the Director, and all master keys shall be shipped by registered mail to the Director.

5.9 FINISHES

Drawings shall include a schedule of room finishes, and all finish materials shall comply with applicable standards. Painting systems shall be based on a manufacturer's system.

5.10 MECHANICAL

5.10.1 Plumbing. No piping, except waste or drain piping, shall be installed in or below concrete slabs on grade. Water piping in building shall be Type "L" hard-drawn copper for above grade use. Sprinkler systems shall be designed in accordance with NFPA standards.

5.10.2 Mechanical and refrigeration. Mechanical systems shall be designed for the most energy efficient operation possible and shall conform to either ASHRAE or SMACNA standards. Mechanical room arrangement shall provide for easy access for removal/servicing of equipment.

5.11 ELECTRICAL

Electrical distribution systems shall conform to NEC standards and devices to NEMA and UL ratings.

(Sections 5.12 through 5.99 are reserved. Section 6.0 is next.)

CHAPTER 6
PRIVATE DEVELOPMENT

6.0 GENERAL **6-1**
6.1 STORMWATER MANAGEMENT **6-1**
6.1.1 Facilities 6-1
6.1.2 Retention pond 6-1
6.2 SEWAGE COLLECTION SYSTEMS **6-2**
6.3 PUMP STATIONS **6-2**
6.3.1 Design 6-2
6.3.2 Small force main 6-2
6.3.3 Identification tape 6-2
6.4 STREETS **6-2**
6.4.1 Design 6-2
6.4.2 Parking area pavement section 6-2
6.4.3 Parking lot pavement markings 6-2
6.5 LIGHTING **6-3**
6.5.1 Safety factor 6-3
6.5.2 Design 6-3
6.6-6.99 (Reserved)

List of Illustrations for Chapter 6

TABLES
6-1 General Lighting Standards 6-5
FIGURES
None
PLATES
None

Chapter 6

PRIVATE DEVELOPMENT

6.0 GENERAL

Criteria established in this chapter represent minimum acceptable standards for the design of private development, which includes but is not limited to stormwater management facilities, sewage collection systems, pumping stations, and streets to be owned and maintained by the private owner. The designer shall be responsible for determining whether specific site conditions require the use of materials and methods over and above those specified herein and providing designs for the same to ensure proper construction.

6.1 STORMWATER MANAGEMENT

6.1.1 **Facilities**. The design of private stormwater management facilities shall conform to criteria established in Chapter 1 of this manual, except that a minimum size storm drain pipe of 12 inches in diameter is acceptable where access points are not more than 50 feet apart.

6.1.2 **Retention pond**. The design of a private retention pond shall conform to criteria established in Chapter 1 of this manual. In addition to the pond design plan, a landscape plan, an erosion and sediment control plan, and a maintenance program for the pond shall be provided to the Director.

6.2 SEWAGE COLLECTION SYSTEMS

The design of private sewage collection systems shall conform to criteria established in Chapter 2 of this manual. Inspection and testing shall be according to the sanitary sewer section of the City *Standard Specifications*.

6.3 PUMP STATIONS

6.3.1 Design. Pump stations shall be designed according to Chapter 3 of this manual. A construction plan and design data shall be provided to the Director for review prior to construction, which shall not begin until after the plans are approved.

6.3.2 Small force main. When a force main size is less than four inches in diameter, Schedule 80 PVC pipe may be used. When PVC pipe is used, identification tape and copper-clad wire shall be installed in accordance with this section.

6.3.3 Identification tape. The installation of all non-metallic underground utility lines shall include a continuous strip of identification tape within 18 inches of the surface over the pipeline and also a continuous 10-gauge, copper-clad wire shall be installed directly over the line. The wire shall be attached to the line with strapping every 100 feet and be terminated above ground in a cast iron box at a maximum of every 500 feet for the connection of a conductive metal detector for locating purposes.

6.4 STREETS

6.4.1 Design. The design of private streets shall conform to criteria established in Chapter 4 of this manual, except that the Virginia Department of Transportation (VDOT) standard combination four-inch curb and gutter CG-7 may be acceptable.

6.4.2 Parking area pavement section. Parking aisles shall have the same pavement section as required for a public residential street. Parking stalls may be constructed with a minimum of two-inch SM-2 and eight-inch stone over CBR 20 sub-grade.

6.4.3 Parking lot pavement markings. All on-site pavement markings shall be reflectorized Type A (paint) or Type B (preformed or thermoplastic material) in accordance with the latest edition of the VDOT *Road and Bridge Specifications*.

a. Fire lanes and parcel pick-up markings shall be yellow (equivalent to Federal Standard color # 595-13538).

b. Parking space lines shall be white (equivalent to Federal Standard color # 595-17886).

c. Handicapped parking spaces are recommended to be marked in blue in order to visually differentiate these spaces from those markings required for other parking space lines and shall be marked according to the appropriate plate provided in Chapter 4 of this manual.

6.5 LIGHTING

6.5.1 Safety factor. Protective illuminance levels shall be used to enhance the safety of persons and property consistent with reasonable energy conservation principles. The designer should be familiar with the following considerations:

a. Adequate security lighting is a proven crime deterrent.

b. In recent years, advancements in lighting technology have progressed to a point that indicates higher security lighting levels can be achieved without a substantial increase in electrical energy consumption.

c. It is feasible in many instances to increase illuminance levels in an area by employing a more efficient lamping system, thereby providing more effective lighting without incurring increased costs for installing new lighting fixtures.

6.5.2 Design. Criteria outlined in Table 6-1 shall be used in developing designs offered to the Director for review. To ensure uniform lighting of an area, the term *minimum maintained lighting* is used. In essence, this term means that the proper illuminance level prescribed for that activity in this chapter is the minimum footcandle power allowable in the darkest section of the area. For instance, a pole-mounted luminaire (lamp) casting its light downward and spreading out forms a triangle, with the baseline where the light strikes the ground. The weakest measurement of footcandle power of light should be found where either the left or the right leg of the triangle of light strikes the ground. Minimum maintained lighting is established at these points. All other points between the minimum maintained area and the light source will be brighter because they will be closer to the light source. Therefore,

a parking lot with a one footcandle power minimum maintained lighting level prescribed should measure one footcandle power of illuminance at the darkest point of illumination and may read five- to 10-footcandle power or higher directly under the light source.

(Sections 6.6 through 6.99 are reserved. Section 7.0 is next.)

Table 6-1

GENERAL LIGHTING STANDARDS

TYPE OF AREA	UNIT	MED, OFC PK, SHOP AREA, WHLS & RTL	EDUC, CHURCH, MFG & INDUS
Parking and Pedestrian Collection	Footcandles; Uniformity Ratio	0.9 4:1	0.6 4:1
Enclosed Walkway	Footcandles; Uniformity Ratio	4.3 4:1	4.3 4:1
Open Walkway; Exterior Stairway; Bikeway	Footcandles (average); Uniformity Ratio	2.2 4:1	1.1 4:1
Private Roadway (w/o parallel walk or parking)	Footcandles; Uniformity Ratio	1.0 3:1	0.5 4:1

REQUIREMENTS FOR NEW FIXTURES

1. No frosted fixtures.
2. High pressure sodium vapor bulbs, except mercury vapor can be used where more than 80 percent of existing lights are mercury vapor.
3. Consider shade tree location.
4. Use manufacturer's charts for fixture used, when available.
5. Outages caused by wiring problems shall be corrected within 30 days.
6. Fixtures shall be cleaned, etc. and bulbs shall be replaced within seven days after notice of a defect.
7. Spacing of fixtures along walks and parking spaces to be a maximum of five times the height of the fixture.
8. One-side lighting to be spaced at a maximum of two and one-half times the width of the walk and/or parking space being lighted.
9. The uniformity requirements should not be used to preclude focus lighting of special buildings and/or objects.

CHAPTER 7
MISCELLANY

7.0 GENERAL **7-1**
7.1 METRIC **7-1**
7.1.1 Terminology 7-1
7.1.2 Metric Units 7-2
7.1.3 Soft (rounded) Values 7-2
7.1.4 Concrete Conversions 7-2
7.2 UTILITY LOCATING **7-9**
7.2.1 Connections 7-9
7.2.2 Locations 7-9
7.3 DESIGN STANDARD PLATES **7-9**
7.4-7.99 (Reserved)

List of Illustrations for Chapter 7

TABLES
7-1 Metric Units Used by the Construction Trades 7-3
7-2 Metric Conversion (Examples) 7-6
FIGURES
None
PLATES
4701 Utility Connections (Customer Service) 7-10
4702 Utility Locations (Municipal Construction) 7-11

Chapter 7

MISCELLANY

7.0GENERAL

There is virtually ***a megagram*** (that is: a metric ton) of information available on the metric system. Conversion to metric in the United States is seemingly inevitable -- but the wheels of progress are grinding ever so slowly; therefore, only a sampling of the anticipated metric environment is offered in this chapter. In a like manner, local efforts are steadily gaining momentum for standardization of construction-oriented activities on a regional basis. Although the idea of standardization embraces several issues, this chapter addresses only the potential for placing utility lines in public rights-of-way and easements.

7.1METRIC

7.1.1 Terminology. Converting to the metric system of measurement will require learning "a foreign language" for many people. Not necessarily so for people in the construction trades according to an article by Stan Jakuba, a metric management and training consultant in Hartford, Connecticut, who wrote:

> "Perhaps it should be no surprise that the construction trades are proving to be the most adaptable sector of the construction industry in converting to the metric system. People in the trades tend to be technically oriented and many already use metric tools to maintain their vehicles

and equipment. On a metric construction job, they are immersed in metric measures, the fastest way to learn. And as a tile setter explained, 'My kids are using metric in school and I want to keep up with them'."

> ..... technical advisor for Volume 5, Issue 2 (March-April 1996) of ***Metric in Construction***; Construction Metrication Council of the National Institute of Building Sciences, Washington, D.C.

7.1.2 Metric Units. Table 7-1 is offered as an aid to designers, particularly those who are new in the business. It provides a concise chart of the metric units used by the construction trades.

7.1.3 Soft (rounded) Values. In Volume 3, Issue 6 (November-December 1994) of ***Metric in Construction***, the CMC cites metric as a better system to use, saying, " Because metric is a base-10 (decimal) system, switching to larger or smaller units is fast and easy and calculations are more efficient." However, after conversion, "hard" (calculated) values are not always practical, considering normal tolerances allowed in the industry. "Soft" (rounded) values, on the other hand, are more appropriate. The CMC advises caution when rounding (saying that common sense and experience are required) and recommends paying close attention to the following notes:

- Neither the original units nor the conversion factors are rounded before multiplying; only the product is rounded.
- The rounded metric value should have about the same degree of accuracy as the original inch-pound value.
- Retain the value that neither sacrifices nor exaggerates the implied accuracy of the number.

7.1.4 Concrete Conversions. Table 7-2 is a consolidation of three tables found in Volume 3, Issue 6 of ***Metric in Construction***. Pertinent notes, examples and cautions contained in the newsletter have been inserted into the table in an effort to enhance clarity of the information and, as put by the CMC, "as an interim aid in developing the needed feel for reasonable metric values."

Table 7-1

METRIC UNITS
USED BY THE CONSTRUCTION TRADES

TRADE	QUANTITY	UNIT	SYMBOL
Surveying	length	kilometer, meter	km, m
	area	square kilometer hectare (10 000 m^2) square meter	km^2 ha (hm^2) m^2
	plane angle	degree minute second percent	° ′ ″ %
Excavating	length	meter, millimeter	m, mm
	volume	cubic meter	m^3
Paving	length	meter, millimeter	m, mm
	area	square meter	m^2
Concrete	length	meter, millimeter	m, mm
	area	square meter	m^2
	volume	cubic meter	m^3
	temperature	degree Celsius	°C
	water capacity	liter (cubic decimeter)	L (dm^3)
	mass	megagram (metric ton) kilogram	Mg (t) kg
	cross-sectional area	square millimeter	mm^2
Trucking	distance	kilometer	km
	volume	cubic meter	m^3
	mass	megagram (metric ton)	Mg (t)
Masonry	length	meter, millimeter	m, mm
	area	square meter	m^2
	mortar volume	cubic meter	m^3

Table 7-1 (continued)

Steel	length	meter, millimeter	m, mm
	mass mass per unit length	megagram (metric ton) kilogram kilogram per meter	Mg (t) kg kg/m
Carpentry	length	meter, millimeter	m, mm
Plastering	length	meter, millimeter	m, mm
	area	square meter	m^2
	water capacity	liter (cubic decimeter)	L (dm^3)
Glazing	length	meter, millimeter	m, mm
	area	square meter	m^2
Painting	length	meter, millimeter	m, mm
	area	square meter	m^2
	capacity	liter (cubic decimeter) milliliter (cubic centimeter)	L (dm^3) mL (cm^3)
Roofing	length	meter, millimeter	m, mm
	area	square meter	m^2
	slope	percent ratio of lengths	% mm/mm, m/m
Plumbing	length	meter, millimeter	m, mm
	mass	kilogram, gram	kg, g
	capacity	liter (cubic decimeter)	L (dm^3)
	pressure	kilopascal	kPa
Drainage	length	meter, millimeter	m, mm
	area	hectare (10 000 m^2) square meter	ha(hm^2)
	volume	cubic meter	m^3
	slope	percent ratio of lengths	% mm/mm, m/m

Table 7-1 (continued)

HVAC	length	meter, millimeter	m, mm
	volume (capacity	cubic meter liter (cubic decimeter)	m^3 L (dm^3)
	air velocity	meter/second	m/s
	volume flow	cubic meter/second liter/second (cubic deci-meter/second)	m^3/s L/s (dm^3/s)
	temperature	degree Celsius	°C
	force	newton, kilonewton	N, kN
	pressure	pascal, kilopascal	Pa, kPa
	energy	kilojoule, megajoule	kJ, MJ
	rate of heat flow	watt, kilowatt	W, kW
Electrical	length	millimeter, meter, kilometer	mm, m, km
	frequency	hertz	Hz
	power	watt, kilowatt	W, kW
	energy	megajoule kilowatt hour	MJ kWh
	electric current	ampere	A
	electric potential	volt, kilovolt	V, kV
	resistance	milliohm, ohm	mΩ, Ω

SOURCE: ***Metric in Construction*** (Volume 5, Issue 2; March-April 1996), a newsletter published by the Construction Metrication Council of the National Institute of Building Sciences, Washington, D.C.

Table 7-2

METRIC CONVERSION
(EXAMPLES)

1. COMMON METRIC CONVERSION FACTORS

TO CONVERT	TO	MULTIPLY BY
inches	meters (m)	0.0254
feet	meters (m)	0.3048
pounds	kilograms (kg)	0.4535924
fluid ounces	milliliters (mL)	29.57353
gallons	liters (L)	3.7854118
psi	megapascals (MPa)	0.00689476
cubic yards	cubic meters (m^3)	0.7645549
pounds per cubic yard	kilograms per cubic meter (kg/m^3)	0.5933
pounds per cubic feet	kilograms per cubic meter (kg/m^3)	16.01846
Fahrenheit (F)	Celsius (C)	5/9 x (°F - 32)
pound force	newton (N)	4.448222

NOTE: To convert from metric units to inch-pound units, divide instead of multiply by the factors in the third column.

EXAMPLE: To convert 564 pounds per cubic yard of cement to kilograms per cubic meter, multiply 564 by 0.5933 to obtain 334.6212 and round to 335 kb/m^3. Note that reporting the value to four decimal places would be a mistake because it implies that cement is batched to the nearest 0.0001 kilogram. Since the cement batching tolerance is 1 percent, or about 2.6 kilograms for this example, 335 kg/m^3 is the more appropriate value.

CAUTION: Be careful when working with multiple units. A common mistake when converting pounds of cement per cubic yard is to convert pounds to kilograms but to neglect converting cubic yards to cubic meters. Use the 0.5933 factor for a one-step conversion

Table 7-2 (continued)

2. TYPICAL CONCRETE VALUES

TYPICAL VALUE	INCH-POUND	METRIC
Weight of bag of cement	94 lb.	40 kg
Rebar designations	#3 to #18	#10M to #55M
Vapor barrier thickness	6 mils	150 μm
Concrete design strength	3000 psi	21 MPa
High-strength concrete	over 6000 psi	over 41 MPa
Cement content, 6-bag mix	564 lb/cu ft	335 kg/m^3
Density of concrete	145 lb/cu ft	2320 kg/m^3
Ready mix truck capacity	9 cu yd	7 m^3
This much site-added water: Increases slump by:	1 gal/cu yd 1 in	5 L/m^3 25 mm
Slump	3 to 4 in	75 to 100 mm
Slab thickness	5 in	125 mm
Temperature of fresh concrete as mixed	50 to 90 °F	10 to 32 °C

NOTES:

1. Memorizing equivalent values in the two systems is not feasible, however **using** the figures given in this table can aid designers in developing the needed feel for reasonable metric values.

2. Metric advocates discourage the use of dual dimensioning and urge users to think in metric units rather than mentally converting inch-pound to metric units. A concern of many professionals, however, is that errors are not as readily recognizable when expressed in metric units. For instance, an erroneously calculated concrete elastic modulus of 30,000 psi is an easily recognized error, but an erroneous elastic modulus of 207 MPa may not be as evident.

3. Designers must be mindful that rounding requires careful consideration of consequences. For example, 4000-psi concrete has been converted to 30-MPa concrete in some documents. A 30-MPa concrete is actually a 4350-psi concrete with a strength nearly 9 percent higher than 4000-psi concrete. Thus, concretes proportioned for a 4000-psi design strength may not have an adequate overdesign to meet the acceptance requirements for 30-MPa concrete. A design value of 28 MPa is closer to the 4000-psi value and is the better choice.

Table 7-2 (continued)

3. COMPARISON OF BATCH QUANTITIES IN INCH-POUND AND METRIC UNITS (medium consistency concrete, 75 to 100 mm slump)

TYPICAL VALUE	INCH-POUND	METRIC
Water-cement ratio	0.45	0.45
Coarse aggregate, max size	3/4 in	19 mm
Air content	6%	6%
Water per volume	300 lb/cu yd	180 kg/m^3
Cement per volume	665 lb/cu yd	395 kg/m^3
Fine aggregate per volume	1040 lb/cu yd	620 kg/m^3
Coarse aggregate per volume	1800 lb/cu yd	1070 kg/m^3

NOTES:

1. Water in a concrete mixture is measured using weight and mass (pounds and kilograms), not volume (liters and gallons).

2. Admixture dosages, if listed, would be shown in milliliters (mL) instead of fluid ounces.

3. Batch quantities are converted to round, easy-to-use numbers in this table.

SOURCE: ***Metric in Construction*** newsletter (Volume 3, Issue 6; November-December 1994); Construction Metrication Council of the National Institute of Building Sciences, Washington, D.C. Notes, examples and cautions were either already in the CMC tables or were located in other parts of the same newsletter.

7.2 UTILITY LOCATING

About two years ago, the Hampton Roads Planning District Commission and the Hampton Roads Utility & Heavy Contractors Association established a "Standardization Committee." The committee was to address the orderly placement of utilities in public rights-of-way and easements, considering proximity limitations regarding specific utility lines. The City of Newport News is the first of the affected municipalities to begin implementation of some of that committee's recommendations. Although not achievable in every situation, especially since Newport News is approximately 90 percent developed, standardization in the placement of utilities is deemed worthy of pursuit. Therefore, two criteria plates (adapted from the committee's drawings) are included in this chapter to aid designers when considering utility placements.

7.2.1 Connections. Generally, the concept provides that customer service connections be specifically arranged within a 10-foot wide shared utility area lengthwise along streets but be modified somewhat within cul-de-sacs (see plate 4701).

7.2.2 Locations. In municipal construction, the concept involves an easement, of variable width depending upon the number of utilities and the type of street proposed, for the placement of utilities on both sides of a street, with water and sanitary sewage lines being placed under the pavement (see plate 4702).

7.3 DESIGN STANDARD PLATES

Design standard plates for this chapter are:

Number	Title
4701	Utility Connections (Customer Service)
4702	Utility Locations (Municipal Construction)

(Sections 7.4 through 7.99 are reserved. There are no sections that follow.)

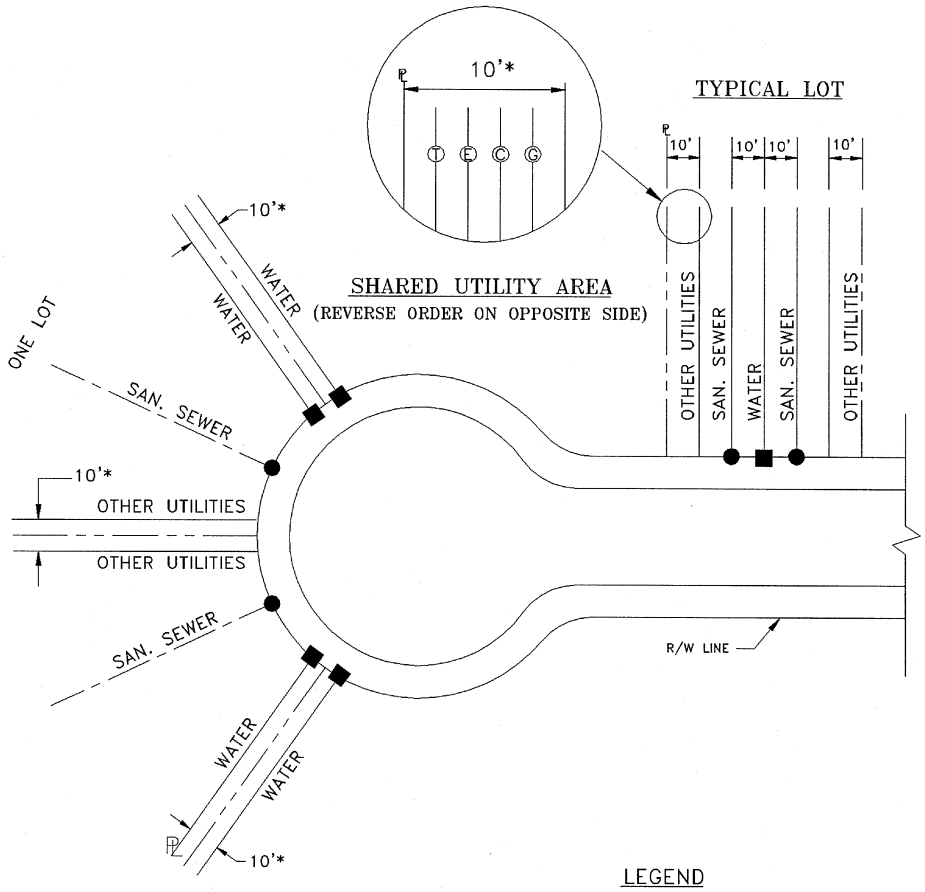

LEGEND

- * SHARED UTILITY EASEMENT
- ● SEWER CLEANOUT
- ■ WATER METER
- Ⓣ TELEPHONE
- Ⓔ ELECTRICITY
- Ⓒ CABLE TV
- Ⓖ NATURAL GAS

NOTE: Developed from a conceptual drawing published by the "Standardization Committee," a joint committee established in 1994 by the Hampton Roads Planning District Commission and the Hampton Roads Utility & Heavy Contractors Association.

Approved August 1997

MOSTAFA A. SABBAH, Ph.D., P.E.
Director, Department of Engineering

UTILITY CONNECTIONS (CUSTOMER SERVICE)

Plate 4701

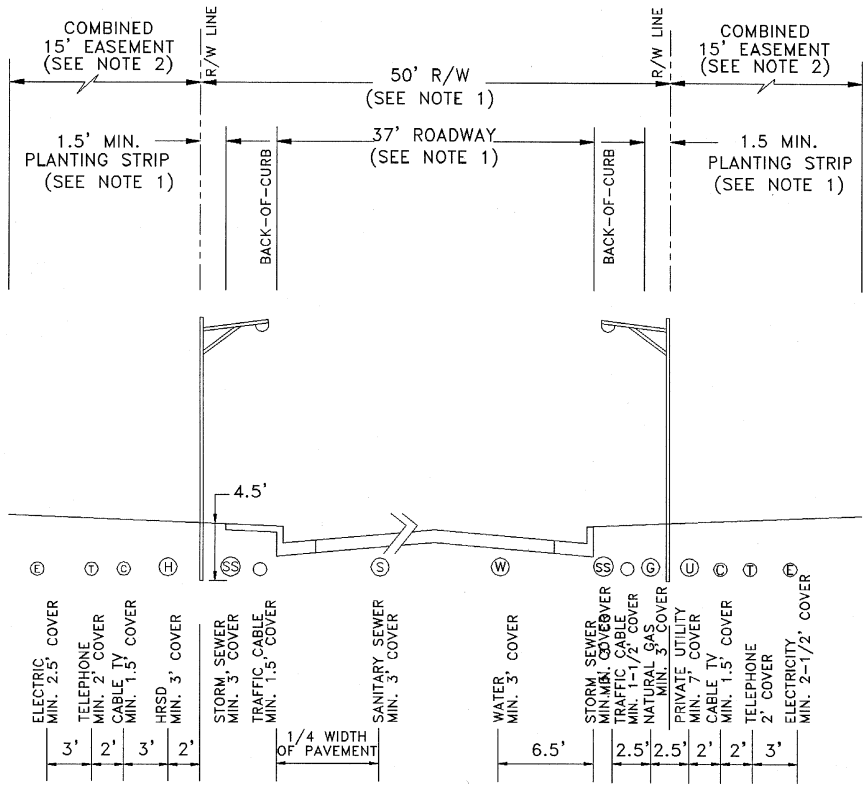

NOTES:

1. Right-of-way, roadway and planting strip widths will vary based upon the classification of the street proposed (designers are referred to Chapter 4 of the Newport News *Design Criteria Manual*).

2. Combined easement widths will vary depending upon the number of utilities proposed (see plan sheets for the particular development). This plate is intended to assist designers in locating utilities within the easement.

3. Developed from a conceptual drawing published by the "Standardization Committee," a joint committee established in 1994 by the Hampton Roads Planning District Commission and the Hampton Roads Utility & Heavy Contractors Association.

Approved August 1997

MOSTAFA A. SABBAH, Ph.D., P.E.
Director, Department of Engineering

UTILITY LOCATIONS
(MUNICIPAL CONSTRUCTION)

Plate 4702

Glossary

Editor's Note: This section contains definitions for certain words found in this manual and explains some of the acronyms used. For the convenience of designers, pertinent definitions have also been extracted from several chapters of the ***Newport News City Code***. These definitions were current as this manual went to press and the notation "(chapter # and/or appendix #)" is included.

AASHTO. American Association of State Highway and Transportation Officials, 444 North Capitol Street, Suite 225, Washington, D.C. 20001; (202) 624-5800.

Accessory structure. A structure subordinate to the principal building on the same lot or serving a purpose customarily incidental to the principal building (chapter 33.02; and, generally the same in chapter 45).

Accessory use. Except as otherwise provided in the zoning district regulations, an "accessory use" is: (1) A use which is conducted on the same lot as the principal use to which it is related; (2) Clearly incidental to, and customarily found in connection such principal use; and, (3) Operated and maintained substantially for the benefit or convenience of the occupants (chapter 33.02; and, generally the same in chapter 45).

ACI. American Concrete Institute, P.O. Box 19150, Detroit MI 48219; (303) 532-2600.

Acreage. Any parcel of land described by metes and bounds and not shown on a plat of a recorded subdivision legally admitted to record (chapter 45).

ADA. Americans with Disabilities Act.

Adequate/reasonable. Standards or specifications as promulgated and/or approved by the City of Newport News, the Commonwealth of Virginia or other regulatory agencies (chapter 33.02).

Agent. The city manager, a representative of the governing body, who has been appointed to serve as the agent of the city council in the approving of subdivision plats (appendix B).

Agricultural lands. Those lands used for the planting and harvesting of crops or plant growth of any kind in the open, pasture, horticulture, dairying, floriculture, or in the raising of poultry and/or livestock, except land used for gardening or landscaping (chapter 37.1).

AI. Asphalt Institute, Research Park Drive, P.O. Box 14052, Lexington KY 40512-4052; (606) 288-4960, fax (606) 288-4999.

AISC. American Institute of Steel Construction, One East Wacker Drive, Suite 3100, Chicago IL 60601-2001; (312) 670-2400.

Alley. A permanent serviceway providing a secondary means of access to abutting properties (chapter 45; and, appendix B).

Alteration. Change, improvement and/or replacement of part(s) in buildings or structures not affecting the supporting members of such building or structures (chapter 33.02; and, generally the same in chapter 45).

ANSI. American National Standards Institute, 11 West 42nd Street, 13th Floor, New York NY 10036; (212) 642-4900.

Apartment house. See “Dwelling, multi-family.”

Approve. The word “approve” shall be considered to be followed by the words “or disapprove” (chapter 25).

Approved equal. A product, component or process whose use in or on a particular project is specified as a standard for comparison purposes.

ASHRAE. American Society of Heating, Refrigerating and Air-Conditioning Engineers, 1791 Tullie Circle, NE, Atlanta GA 30329; (404) 636-8400.

ASME. American Society of Mechanical Engineers, 345 East 47th Street, New York NY 10017; (212) 705-7722.

ASTM. American Society for Testing and Materials, 1916 Race Street, Philadelphia PA 19103-1187; (215) 977-9679.

Authorized representative. Any person, persons or firms duly authorized by the City.

AWI. Architectural Woodwork Institute, P.O. Box 1550, 13924 Braddock Road, Suite 100, Centreville VA 22020; (703) 222-1100.

Basement. That portion of a building which is partly or completely below grade (chapter 45).

Best Management Practices (BMPs). A practice, or combination of practices contained in the Newport News *Design Criteria Manual*, that is determined by the director of engineering to be an effective, practical means of preventing or reducing the amount of pollution generated by nonpoint sources to a level compatible with water quality goals (chapter 37.1).

Block. The area fronting on the same side of a public street or road situated between two (2) street intersections, except that where the distance between such street intersections is greater than one thousand two hundred (1,200) feet, the area fronting on the same side of a public street or road not more than six hundred (600) feet on either side of the parcel, lot or tract of land being considered as a building site shall be considered to be a block for the purpose of this ordinance (Zoning Ordinance); provided further, that in case of a dead-end or cul-de-sac street, the intersection of the circular right-of-way with the extension of the street centerline shall be considered the terminus of the block (chapter 45).

Board. The Virginia Soil and Water Conservation Board (chapter 35). For the purposes of this manual, the term "Board" shall also mean any Board, whether local, State or Federal, that is specifically identified within the context of the activity involved.

Brand name specification. A specification (that is) limited to one or more items by manufacturers' names or catalogue numbers (chapter 2).

Buffer area. An area of natural or established vegetation managed to protect other components of a resource protection area and state waters from significant degradation due to land disturbances (chapter 37.1). A treed area remaining natural or landscaped and required to provide screening between districts of different intensities (chapter 45).

Buildable width or buildable depth. The width or depth respectively of that part of the lot not included within the front, side or rear yard (chapter 45).

Building. Any structure for the housing, shelter, support or enclosure of persons, animals, chattels or property of any kind (chapters 33.02 and 45).

Building setback. The minimum distance that a building must be set back from the front property line or front boundary line (appendix B)

Building sewer. A sewage drain pipe extending from five (5) feet outside the inner face of the building wall to a sewer (chapter 33).

Caliper. The diameter of a tree trunk measured six (6) inches above ground level for nursery stock and four-and-one-half feet above grade for existing trees on-site (chapter 33.02).

CE. Corps of Engineers (U.S. Department of the Army), Chief of Engineers - Referral, Washington, D.C. 20314; (202) 272-0660.

Certificate. A document to be recorded in the clerk of the court's office prepared in conformity with city policy describing metes and bounds of all lots and land within a subdivision to be recorded at the clerk's office as a permanent record of the property so subdivided (appendix B).

CFR. Code of Federal Regulations (available from the Government Printing Office), N. Capitol Street between G and H Street, NW, Washington, D.C. 20402; (202) 783-3238. (Material is usually first published in the "Federal Register.")

Chesapeake Bay Preservation Area (CBPA). Any land designated as such on the map adopted by the city council subject to the determination of the director of planning and development on a site-specific basis. A Chesapeake Bay Preservation Area shall consist of a resource protection area, a resource management area and any designated industrial waterfront intensely developed area (chapter 37.1).

City. The term "city," "this city" or "the city" shall mean the Consolidated City of Newport News, in the State of Virginia (chapter 1). For the purposes of this manual, the term also includes the phrase, "acting through its officials, officers, employees or representatives."

City Manager. The City Manager of the Consolidated City of Newport News, Virginia, or his authorized representatives. For the purposes of this manual, the city manager's authorized representative is the director of Engineering unless otherwise stated.

Code. Whenever the term "Code" or "this Code" is used, without further qualification, it shall mean the Code of Ordinances, City of Newport News, Virginia, as designated in section 1-1 (of the Code) (chapter 1). For the purposes of this manual, the term also includes the Federal and State codes under which the work is to be performed.

Combined sewers, A single sewer line that collects sanitary sewage and stormwater runoff.

Commission. The Virginia Marine Resources Commission (chapter 44). For the purposes of this manual, the term shall also include any and all commissions as specifically identified within the context of the activity involved.

Commissioner. The commissioner of marine resources (chapter 44). For the purposes of this manual, the term shall also include the phrase, "unless a different commissioner is clearly indicated within the context of the activity involved."

Committee. The site plan review committee, an advisory body that reviews plans and provides recommentations to the director (chapter 33.02). For the purposes of this manual, the term shall also include any and all committees as specifically identified within the context of the activity involved.

Comprehensive plan. All plans or parts thereof officially adopted by the city council pursuant to Virginia law for the physical development of the City of Newport News or any territory within its jurisdiction showing the long-range proposals for the general development of the city (chapter 33.02).

Concept plat. A plat prepared in corformity with city policy showing metes and bounds of all lots and land within a subdivision and on record in the department of engineering (appendix B).

Construction. Building, altering, repairing, improving or demolishing any structure, building or highway, and any draining, dredging, excavating, grading or similar work upon real property (chapter 2).

Construction area. The portion of a site on which a structure or improvements are made (chapter 33.02).

Construction sign. A temporary sign denoting the name of a project and/or the name(s) of the architect(s), contractor(s), developer(s), engineer(s), prospective tenant(s) or occupant(s), and/or project financier(s) of a tract, building or structure being developed or under construction (chapter 33.01).

Contractor. Any person having a contract with the city (chapter 2).

Control room. Superstructure of a pump station which usually includes all electrical equipment such as control panels, alarm transmitter, electric motor, etc.

Council. Whenever the term "council" or "city council" is used it shall be construed to mean the council of the Consolidated City of Newport News, Virginia (chapter 1).

CPSC. Consumer Product Safety Commission, 5401 Westbard Avenue, Bethesda MD 20207; (301) 492-6580, (800) 638-2772.

Criteria. Standards on which a judgment or decision may be based.

Cul-de-sac. A singular public street with no adjoining public streets along its length, terminating in an appropriate turnaround for a safe and convenient reverse traffic movement (appendix B).

Culvert. A conduit for conveying water through an embankment.

Customer utility services. All those poles, towers, wires, lines, cables and appurtenant equipment located between the distribution line and wall of the building or structure occupied or intended to be occupied by a customer in the case of any service such as electricity, telephone, telegraph, cable television, traffic control, fire alarm or police communication, and all those conduits, pipes and appurtenant equipment located between the main and the wall of the building or structure occupied or intended to be occupied by a customer in the case of any service such as gas, water, steam or petroleum (chapter 40.1).

Density. (Applicable to mobile home parks only.) A factor representing the average number of mobile home units per acre of land within the development. Public streets or other areas not usable as part of the mobile home park property are excluded from such acreage in making this determination (chapter 25).

Design Criteria Manual. (This manual.) A formal document of design criteria, prepared by the department of engineering and approved by the council, that is used in the review of construction plans for and the design of public facilities (other than public water supply) and in the review of plans (chapter 33.02).

Detention. The temporary storage or impoundment of stormwater runoff.

Developed multifamily residential property. Any property used primarily for residential living purposes and containing dwelling units that are stacked vertically or one on top of another, and are two (2) or three (3) dwelling units in height (chapter 37.1).

Developed other property. Developed property that does not serve a primary purpose of providing permanent dwelling units or contain structures that are greater than three (3) stories in height (chapter 37.1).

Developed residential property. Any property used primarily for residential living purposes that does not have a separate dwelling unit located vertically or stacked above the single dwelling unit's footprint (chapter 37.1).

Developed site/property. An area of improved property that independently meets all requirements of the site plan ordinance. This definition includes entire shopping centers, malls, office complexes, etc., or such portions thereof, which independently meet all such requirements. This term shall be interpreted to include premises which met all requirements of the site plan ordinance at the time such premises were developed or were improved prior to the adoption of the site plan ordinance (chapter 33.01). A parcel of real property that has been altered in whole or in part from its natural state by the addition of improvements, such as buildings, structures, paving and/or other impervious surfaces (chapter 37.1; and, generally the same in chapter 45).

Developer. A person who owns or leases property being developed or such person's authorized agent (chapter 33.02; and, generally the same in chapter 45).

Development. The construction, or substantial alteration, of residential, commercial, industrial, institutional, recreation, transportation, or utility facilities or structures (chapter 37.1).

Development plans. Plans and specifications for the construction of physical improvements required in this ordinance (appendix B).

Diameter at breast height (DBH). The diameter of a tree measured outside its bark at a point four and one-half (4½) feet above the existing grade (chapter 37.1).

Director. The Director of the Department of Engineering for the Consolidated City of Newport News, Virginia, or his authorized representatives. For the purposes of this manual, the term "director" shall also include the term "administrator" if that meaning is implied by the context of the activity involved (such as, with respect to manufactured home parks as set forth in the ***Newport News City Code***, chapter 25).

Distances and area. Distances and area refer to measurement in a horizontal plane (chapter 25). For the purposes of this manual, this term shall also include the phrase, "unless clearly indicated otherwise by the context of the activity involved."

Distribution lines. All those wires, cables and appurtenant equipment located between the customer utility services and the transmission line (chapter 40.1).

District, zoning. A classification established by this ordinance (Zoning Ordinance) for land in the City of Newport News which regulates the use of buildings and land, the height of buildings, the size of yards, and other development characteristics (chapter 45.)

Disturbed land area. An area cleared or graded as necessary for the construction of improvements including, but not limited to, buildings, roads and drives, parking areas, and sidewalks (chapter 37.1).

DOT. (United States) Department of Transportation, 400 Seventh Street, SW, Washington, D.C. 20590; (202) 366-4000.

Drainage, Interception and removal of ground water or surface water, by artificial or natural means.

Dripline. A vertical projection to the ground surface from the furthest tips of a tree's leaf canopy (chapter 37.1). A vertical projection to the ground surface from the farthest lateral extent of a tree leaf canopy (chapter 33.02).

Dry prime (suction lift pump). Pump that will normally retain prime or automatically preprime itself when draining suction from a liquid pool whose surface is below the casing of the pump.

Dry well. The below-grade structure of a dry well/wet well station configuration, in which the station pumps, valves and piping are located.
Durable landscape barrier. Hedge, wall, anchored landscape timber or berm (chapter 33.02).

Dwelling, attached single-family. A building containing two (2) or more dwelling units sharing at least sixteen (16) horizontal feet of a wall, ceiling or floor area between such units with each unit having its own front and rear or side access to the outside (chapter 45).

Dwelling, detached single-family. A building containing one dwelling unit, entirely surrounded by a yard. Manufactured, travel trailers, housing mounted on self-propelled or drawn vehicles, tents or other forms of temporary or portable housing are not included within this definition (chapter 45). ***Dwelling, single-family***. A detached building containing one (1) dwelling unit (chapter 33.02).

Dwelling, multi-family. A building containing three (3) or more dwelling units, entirely surrounded by a yard, where each dwelling unit is served by a common outside entrance (chapter 45). A building containing more than two (2) dwelling units (chapter 33.02).

Dwelling, multi-family highrise. A building containing six (6) or more stories with residential dwelling units on the upper floors and either a mix of commercial or residential units on the main floor (chapter 45).

Dwelling, two-family. A building containing two (2) dwelling units (chapter 33.02). A building containing two (2) dwelling units, entirely surrounded by a yard, where each dwelling unit is not on a separate lot (chapter 45).

Dwelling unit. A single unit providing complete and independent living facilities for one (1) or more persons, to include permanent provisions for living, sleeping, cooking, eating, and sanitation (chapter 33.02 and generally the same in chapter 37.1 and chapter 45).

Easement. A grant by a property owner of the use of land for a specific purpose or purposes (appendix B).

Engineer or land surveyor. A certified professional engineer or land surveyor licensed by the Commonwealth of Virginia (appendix B).

EPA. Environmental Protection Agency, 401 M Street, SW, Washington, D.C. 20460; (202) 382-2090.

Equivalent residential unit (ERU). The equivalent impervious area of the developed residential property class per dwelling unit located within the city based on the statistical average horizontal impervious area of developed residential property in the city. One ERU shall equal one thousand seven hundred seventy-seven (1,777) square feet of impervious surface area (chapter 37.1).

Erosion. Wear or scouring to soil caused by water or by wind.

Erosion and sedimentation control plan, conservation plan or plan. (Unless the context clearly indicates otherwise) a document containing material relating to the conservation of soil and water resources of a unit or a group of units of land. It may include appropriate maps, an appropriate soil and water plan inventory and management information with needed interpretations, and a record of decisions contributing to conservation treatment. The plan shall contain all major conservation decisions to ensure that the entire unit or units of land will be so treated to achieve the conservation objectives (chapter 35).

Erosion impact area. An area of land not associated with current land-disturbing activity but subject to persistent soil erosion resulting in the delivery of sediment onto neighboring properties or into state waters. This definition shall not apply to any lot or parcel of land of one acre or less used for residential purposes or to shorelines where the erosion results from wave action or other coastal processes (chapter 35).

ERU rate. The service charge fee charged for one ERU as established in this article (chapter 37.1, article II).

Farm. A tract of land used for the production of crops and may include the incidental raising of livestock (chapter 45).

Final plat. A plat prepared in conformity with this ordinance (appendix B) showing metes and bounds of all lots and land within a subdivision to be recorded at the clerk's office as a permanent record of the property so subdivided (appendix B).

Flood routing. The procedure used to derive a downstream hydrograph from an upstream hydrograph, or tributary hydrographs, and from considerations of local inflow by solving the storage equation.

Flooded suction pump. Pump designed to be mounted in a below-grade configuration in which the liquid is contained in the pump casing, piping and valves.

Force main. A sewer line through which sewage is pumped.

Freeboard. The vertical distance from the water surface to the top of the channel embankment or other specified point.

FS. Federal Specification (from GSA), Specifications Unit (WFSIS), 7th and d Streets, SW, Washington, D.C. 20407; (202) 708-9205.

Garage, accessory. An accessory building designed or used only for the storage of self-propelled vehicles owned and used by the occupants of the principal building to which it is accessory (chapter 45).

Garage, storage. Any structure, except for those described as an accessory garage, used exclusively for the storage or parking of self-propelled vehicles (chapter 45).

Goods. All material, equipment, supplies, printing and automated data processing hardware and software (chapter 2).

Governmental activity. Any of the services provided by the city to its citizens for the purpose of maintaining the city, including but not limited to such services as constructing, repairing and maintaining roads; providing sewage facilities and street lights; supplying and treating water; and constructing public buildings (chapter 44).

Grade. The highest average level of finished ground surface adjacent to the exterior walls of a building (chapter 45). For the purposes of this manual, the term shall also include: Profile of the center of a roadway, or the invert of a culvert or sewer. Also, the term shall refer to slope, or ratio or rise or fall of the grade line to its length.

Grinder pump. A grinder pump is a pump with a grinder assembly mounted on an extension of the pump shaft, designed to grind solids larger than a fraction of an inch before they come into contact with the pump impeller.

Ground cover. Any of a variety of living plants that lie close to and cover the ground (chapter 33.02).

GSA. General Services Administration, F Street and 18th Street, NW, Washington, D.C. 20405; (202) 708-5082.

Hampton Roads Sanitation District (HRSD). A body corporate and politic, created by virtue of Chapter 407 of the Acts of Assembly of 1940 of Virginia, and the acts amendatory thereof (chapter 33). c/o North Shore Systems Engineer, P.O. Box 5000, Virginia Beach VA 23455; (757) 460-2261, (757) 877-5736, fax (757) 460-2372.

HRPDC. Hampton Roads Planning District Commission, P.O. Box 1346, Chesapeake VA 23327; (757) 420-8300.

HRUHCA. Hampton Roads Utility and Heavy Contractors Association, 2006 Old Greenbrier Road, Suite 7, Chesapeake VA 23320; (757) 424-4906 (southside), (757) 886-0807 (peninsula), fax (757) 424-7439.

Hydraulic grade line. Determines the elevation, under design conditions, to which the water will rise in the various inlets, manholes, junctions, etc.

Hydrograph. A plot of streamflow against time.

Impervious/surface area. A surface that is covered with material that is resistant to infiltration by water, including, but not limited to, most conventionally surfaced streets, roofs, sidewalks, parking lots and other similar structures (chapter 33.02 and chapter 37.1).

Industrial wastes. Liquid or other wastes resulting from any processes of industry, manufacture, trade or business or from the development of any natural resource (chapter 33).

Industrial waterfront intensely developed area. Any portion of Chesapeake Bay Preservation Area so designated by the city council. Industrial Waterfront IDAs are industrial areas located along the shoreline that, because of the intensity of their use, are characterized by an absence of natural environmental features and a preponderance of impervious surface and bulkheaded or riprapped shoreline (chapter 37.1).

Infiltration. The seepage of groundwater or surface runoff into sanitary sewers through pipe joints, broken pipe, cracks or openings in manholes, and similar faults.

Interceptor. A sewer that receives sewage flow from a number of gravity mains, trunk sewers, sewage force mains, etc.

Interior property line. Any property line that is not adjacent to a street (chapter 33.02).

In the city. The words “in the city” or “within the city” shall mean any territory, jurisdiction of which, for the exercise of its regulatory power, has been conferred on the city by general or special law (chapter 1).

Invert. That part of a pipe or sewer below the springing line (generally the lowest point of the internal cross section).

Land-disturbing activity. Any land change, including but not limited to clearing, grading, excavating, transporting and filling of land, which may result in soil erosion from water or wind and the movement of sediments into waters or onto adjacent properties (chapter 35).

Landscape. To cover, adorn or improve an area using living plants (such as trees, shrubs, vines, ground covers or grass), natural features (such as rock, stone, bark chips, wood shavings or land contouring) and/or structural features (such as fences or walls) (chapter 33.02).

Landscape treatment. Rock, stone, bark chips, wood shavings or opaque durable barrier (chapter 33.02).

Lateral. A sewage line that has no other common sewage lines discharging into it.

Legal plat. A plat prepared in conformity with this ordinance (appendix B) showing metes and bounds of all lots created in a subdivision for the purposes of public streets and/or public improvements (appendix B).

Loading space. A space within the main building or on the premises providing for the standing, loading or unloading of trucks (chapter 45).

Local erosion and sediment control program or local control program. An outline of the various methods employed by the city to regulate land-disturbing activities and thereby minimize erosion and sedimentation in compliance with the state program and may include such items as local ordinances, policies and guidelines, technical materials, inspection, enforcement, and evaluation (chapter 35).

Lot. The word "lot" includes the word "parcel" (chapter 25). Any piece, parcel or portion of property shown on a plat of a recorded subdivision legally admitted to record (chapter 45 and generally the same in appendix B).

Lot area, adjusted. The total lot area plus any creditable additional area as prescribed in Article XXVIII (Zoning Ordinance) which is used for off-street parking, recreational or other open purposes (chapter 45).

Lot area, open. Any portion of a lot or premises not covered by a building or structure (chapter 45).

Lot area, total. The gross area of a lot or premises (chapter 45).

Lot, corner. A lot abutting upon two (2) or more streets at their intersection. The shortest side fronting upon a street shall be considered the front of the lot, and the longest side fronting upon a street shall be considered the side of the lot (chapter 45 and generally the same in appendix B).

Lot coverage. Any area of a lot covered by a structure, not to include surface parking (chapter 45).

Lot depth. The shortest distance between the front lot line and rear lot line measured along a straight line perpendicular to the front lot line. If a lot has no rear yars, then lot depth shall be the shortest distance between the intersection of the two side lot lines and the front lot line (chapter 45). ***Lot, depth of***. The mean horizontal distance between the front and rear lot lines (appendix B).

Lot, double frontage. An interior lot having frontage on two (2) streets (chapter 45 and appendix B).

Lot, frontage. That part of a lot which abuts any vehicular right-of-way, except as provided in section 2-01.18 (where ***Lot, corner*** is defined) (appendix B).

Lot, interior. A lot other than a corner lot (chapter 45 and appendix B).

Lot lines. Lines bounding a lot, as defined herein (Zoning Ordinance).

Lot of record. A designated and recorded portion of a subdivision intended for the purpose of transfer of ownership or building development which has been recorded in the office of the clerk of the appropriate court (chapter 45 and generally the same in appendix B).

Lot width. The horizontal distance between the side lot lines measured at the front yard setback line established by this ordinance (Zoning Ordinance) and/or by a recorded subdivision plat (chapter 45 and generally the same in appendix B).

Main line. A sewer that receives sewage flow from one or more laterals or sub-main sewers.

Map. The Chesapeake Bay Preservation Area Map (chapter 37.1). For the purposes of this manual, the term shall also include the following phrase: “unless the context of use within this manual clearly indicates otherwise.”

Manufactured home. A structure subject to federal regulation, which is transportable in one or more sections; is eight (8) body feet or more in width and forty (40) body feet or more in length in the traveling mode, or is 320 or more square feet when erected on site; is built on a permanent chassis; is designed to be used as a single-family dwelling with or without a permanent foundation, when connected to the required utilities; and includes the plumbing, heating, air-conditioning, and electrical systems contained in the structure (chapter 45).

Manufactured home park. An area designed, constructed, equipped, operated, and maintained for the purpose of providing spaces for manufactured homes intended to be used as living facilities (chapter 45).

Minimum maintained lighting. To ensure uniform lighting of an area, the term *minimum maintained lighting* is used. In essence, this term means that the proper illuminance level prescribed for that activity (in chapter 6 of this manual) is the minimum footcandle power allowable in the darkest section of the area.

Mobile home park (trailer park). A tract of land or a combination of tracts of land under single ownership or management which is designed, constructed, equipped, operated and maintained for the placement of mobile homes (chapter 25).

Mobile home site, A parcel of land within a mobile home park designed and equipped for the placement of a single mobile home (chapter 25).

Mobile home (trailer). Any structure designed or constructed so as to permit occupancy as a temporary or permanent living or sleeping facility which is, has been or reasonably may be equipped with wheels or other devices for transporting the structure from place to place (chapter 45).

NEC. National Electric Code (from NFPA).

NEMA. National Electrical Manufacturers Association, 2101 L Street, NW, Suite 300, Washington, D.C. 20037; (202) 457-8400.

NFPA. National Fire Protection Association, One Batterymarch Park, P.O. Box 9101, Quincy MA 02269-9101; (617) 770-3000, (800) 344-3555.

Nonpoint source pollution. Pollution consisting of constituents such as sediment, nutrients, and organic and toxic substances from diffuse sources, such as runoff from agriculture, silviculture and urban land development and use (chapter 37.1).

Nontidal wetlands. Those wetlands other than tidal wetlands that are inundated or saturated by surface or ground water at a frequency and duration sufficient to support, and that under normal circumstances do support a prevalence of vegetation typically adapted for life in saturated soil conditions, as defined by the U.S. Environmental Protection Agency, in 33 C.F.R. 328.3b, dated November 13, 1986 (chapter 37.1).

Nonvegetated wetlands. Unvegetated lands lying contiguous to mean low water and between mean low water and mean high water (chapter 44).

Noxious weeds. Weeds that are difficult to control effectively, including, but not limited to Johnson Grass, Kudzu, and multiflora rose (chapter 37.1).

Off-street parking area. Space provided for vehicular parking outside the street right-of-way (chapter 45).

OSHA. Occupational Safety and Health Administration (U.S. Department of Labor), N3647, 200 Constitution Avenue, NW, Washington, D.C. 20210; (202) 219-8148.

Owner. The word “owner,” applied to a building or land, shall include any part owner, joint owner, tenant in common, tenant in partnership, joint tenant or tenant by the entirety, of the whole or of a part of such building or land (chapter 1).

Parcel. Any single property or group of adjacent propeties with the same owner.

Parking garage. A structure for parking vehicles (chapter 33.02 and chapter 45).

Parking lot. An on-site area at finished grade for the parking of vehicles and any associated accessways, driveways, or loading and unloading areas; but, excluding parking garage (chapter 33.02 and chapter 45).

PCA. Portland Cement Association, 5420 Old Orchard Road, Skokie IL 60077; (708) 966-6200.

PCI. Precast/Prestressed Concrete Institute, 175 W. Jackson Boulevard, Chicago IL 60604; (312) 786-0300.

Person. The word "person" may extend and be applied to associations, firms, partnerships and bodies politic and corporate, as well as to individuals (chapter 1).

Plan of development. The process for site plan or subdivision plan review to ensure compliance with Section 10.1-2109 of the Code of Virginia and this chapter (37.1), prior to any clearing or grading of a site or the issuance of a building permit (chapter 37.1).

Plat. Map or plan of a tract or parcel of land that is to be or has been developed; including the terms map, plan, plot, replat, replot, and any other tem that can be reasonably construed to mean such (chapter 33.02).

Pneumatic ejector system. A sewage system in which sewage fills a large cast iron pot and is ejected by compressed air.

Property. A lot, tract, parcel of land, or several of the same assembled for the purpose of development (chapter 33.02; and appendix B except "for the purpose of subdividing" is used).

Public facility. A physical improvement, except for a commercial entrance, that by virtue of its use or ownership is under the control of the City of Newport News, the Commonwealth of Virginia or the United States of America (chapter 33.02).

Public right-of-way. A right-of-way that, by virtue of its use or ownership, is under the control of the City of Newport News, the Commonwealth of Virginia or the United States of America (chapter 33.02).

Public roads. A publicly owned road designed and constructed in accordance with water quality protection criteria at least as stringent as requirements applicable to the Virginia Department of Transportation, including regulations promulgated pursuant to (i) the Erosion and Sediment Control Law (10.1-560 et seq. of the Code of Virginia) and (ii) the Virginia Stormwater Management Act (10.1-603 et seq. of the Code of Virginia). This definition includes those roads where the Virginia Department of Transportation exercises direct supervision over the design or construction activities, or both, and cases where secondary roads are constructed or maintained, or both, in accordance with the City of Newport News standards (chapter 37.1).

Pump operating point. That point where the pump station system head curve and the pump performance curve intersect.

Pump performance curve. A curve of total dynamic head versus pumping rate for all flow rates within the capability of the pump.

Pump station system head curve. A curve obtained by combining the system friction curve with a plot of the static head and any pressure differences in the pump station system.

Pump station. A structure which houses pumps, piping, valves, liquid level control and auxiliary equipment.

Receiving waters. A natural watercourse or body of water into which treated or untreated sewage is discharged (chapter 33).

Redevelopment. The process of developing land in Chesapeake Bay Preservation Areas, except for industrialized waterfront intensely developed areas, that is currently or has been previously developed; provided that, to be considered developed a parcel must be or have been covered by at least sixty (60) percent impervious improvements within the five (5) years preceding the proposed development. Development and redevelopment of land in the Industrialized Waterfront IDAs are collectively referred to as “development” (chapter 37.1).

Resource management area components. Designers should refer to the ***Newport News City Code***, section 37.1-49(a)(2).

Resource management area (RMA). That component of the Chesapeake Bay Preservation Area that is not classified as the resource protection area. RMAs include land types that, if improperly used or developed, have the potential for causing significant water quality degradation or for diminishing the functional value of a resource protection area (chapter 37.1).

Resource protection area components. Designers should refer to the ***Newport News City Code***, section 37.1-49(a)(1).

Resource protection area (RPA). That component of the Chesapeake Bay Preservation Area comprised of lands at or near the shoreline that have an intrinsic water quality value due to the ecological and biological processes they perform or are sensitive to impacts which may result in significant degradation to the quality of state and local waters (chapter 37.1).

Riprap. Rough stone of various sizes placed compactly or irregularly to prevent scour by water or debris.

Roadway (highway, street). Portion of the highway (street) included between the outside lines of the gutters or side ditches, including all slopes, ditches, channels and appurtenances necessary for proper drainage protection and use.

Roughness coefficient (n). A factor in the Manning and other flow formulas representing the effect of channel (or conduit) roughness upon energy losses in the flowing water.

Runoff. That part of precipitation carried off from the area upon which it falls. Also the rate of surface discharge of excess precipitation.

S.D.I. Steel Door Institute, 30200 Detroit Road, Cleveland OH 44145; (216) 889-0010.

SECOMP. The City of Newport News "Sewage Collection Management Program" adopted by Council in 1992, which consists of engineering drawings, maps, charts and other documents used in managing the citywide sewage collection system. The program is administered by the Department of Engineering.

Service charge. (Applies to stormwater management activities only.) The user fee based upon the ERU rate applied to property owners of developed residential property, developed multifamily residential property and developed other property (chapter 37.1).

Services. Any work performed by an independent contractor wherein the service rendered does not consist primarily of acquisition of equipment or materials or the rental of equipment, materials and supplies (chapter 2).

Sewage. A combination of the water-carried wastes from residences, business buildings, institutions and industrial establishments, together with such ground, surface and storm water as may be present. The admixture of sewage as above defined with industrial wastes or other wastes shall also be considered sewage within the meaning of this definition (chapter 33).

Sewage collection system. Includes all facilities for collection and pumping of sewage.

Sewage pump. A machine which imparts energy to wastewater to move the wastewater from one location to another.

Sewage treatment plant. Any arrangement of devices and structures used for treating sewage (chapter 33).

Sewer. Pipe or conduit carrying sewage in which owners of abutting properties shall have the use, subject to control by the city (chapter 33).

Sidewalk. The word “sidewalk” shall mean any portion of a street between the curb lines, or the lateral lines of a roadway where there is no curb, and the adjacent property line intended for the use of pedestrians (chapter 1).

Site. The property being or to be developed. Said property may include a lot or group of lots or the leased portion of a lot (chapter 33.02).

Site plan (Class 1). A plan that delineates the overall development of a site (chapter 33.02).

Site plan (Class 2). A plan that delineates the minor development activity contemplated (chapter 33.02).

SMACNA. Sheet Metal and Air Conditioning Contractors National Association, 4201 Lafayette Center Drive, Chantilly VA 22021; (703) 803-2980.

Specification. Any description of the physical or functional characteristics or of the nature of a good, service or construction item. It may include a description of any requirement for inspecting, testing or preparing a good, service or construction item for delivery (chapter 2).

Spillway. A low-level passage serving a dam or reservoir through which surplus water may be discharged, usually a weir over the end of a dam (emergency spillway) or a culvert with or without a riser pipe connection in a dam (principal spillway).

Standard specifications. (A companion document to this manual.) A formal statement of terms, directions, provisions, requirements and specifications, prepared by the department of engineering and approved by the council, that is used in administering public construction contracts and in reviewing plans (chapter 33.02; and, generally the same in appendix B).

State. The Commonwealth of Virginia.

State erosion and sediment control program or state program. The program administered by the Board pursuant to this article (chapter 35, article III), including regulations designed to minimize erosion and sedimentation (chapter 35).

State waters. All waters on the surface and under the ground wholly or partially within or bordering the commonwealth or within its jurisdiction (chapter 35).

Stormwater. Rainfall or any other forms of precipitation (chapter 33).

Stormwater management revenues or revenues. All rates, service charges, fees, assessments, rentals, other charges or other income received in connection with the management and operation of the system, including amounts received from the investment or deposit of money in any fund or account and any amounts contributed by the city council from the general revenues of the city (chapter 37.1).

Stormwater management system or system. The stormwater management infrastructure and equipment of the city and all improvements thereto. Infrastructure and equipment shall include structural and natural stormwater control facilities of all types including, without limitation, retention and detention basins, conduits, pumping stations, and other plants, structures, and real and personal property used for support of the system (chapter 37.1).

Street. The word "street" shall include streets, avenues, boulevards, roads, alleys, lanes, viaducts, bridges and the approaches thereto and all other public highways in the city, and shall mean the entire width thereof between abutting property lines. It shall be construed to include a sidewalk or footpath, unless the contrary is expressed or such construction would be inconsistent with the manifest intent of the council (chapter 1; chapter 33.02; and, generally the same in appendix B). (See also ***Roadway***.)

Street, collector/feeder. A street that conducts traffic or is intended to conduct traffic between major and local streets and/or provides for the collection of traffic, or is intended to provide for the collection of traffic, as a principal entrance into, or a principal means of circulation within one or more subdivisions (appendix B). (See also ***Roadway***.)

Street frontage. All the property abutting one side of a street between two (2) crossing or terminating intersecting streets measured along the line of the street, or if the street is dead-ended, then all of the property abutting one side between an intersecting street and the dead-end of the street. On the turnaround portion of a cul-de-sac, the frontage is that portion of the property abutting upon the turnaround as measured along the circumference of the circular right-of-way (appendix B).

Street, local. A street that is used primarily as a means of public access to the abutting properties but is not a collector street or major street as defined herein (appendix B). For the purposes of this manual, the term shall also include the term “feeder.” (See also ***Roadway***.)

Street, major. A heavily traveled thoroughfare or highway that carries or is intended to carry a large volume of through traffic. The term "major street" is synonymous with the term "major thoroughfare" or "arterial thoroughfare" (appendix B). (See also ***Roadway***.)

Street, private. A street located entirely on private property (chapter 33.02).

Street, public. A street that, through its use or ownership, is under the control of the City of Newport News, the Commonwealth of Virginia or the United States of America (chapter 33.02).

Street, service drive. A public right-of-way generally parallel and contiguous to a major highway, primarily designed to promote safety by eliminating promiscuous ingress and egress to the right-of-way by providing safe and orderly points of access to the highway (appendix B).

Structural alteration. A change in any of the supporting members of a building (chapter 45).

Structure. Any construction or any production or piece of work artificially built or composed of parts joined together. The word “structure” specifically includes signs and billboards, but not paving such as driveways, walkways, patios, etc. (chapters 33.02 and 45).

Subdivider. An individual, corporation or partnership, owning any tract, lot of parcel of land to be subdivided, or a group of two (2) or more persons owning any tract, lot or parcel of land to be subdivided, who have given their power of attorney to one of their group or to another individual to act on their behalf in planning, negotiating, in representing or executing the legal requirements of the subdivision (appendix B).

Subdivision. The land subdivided; and, when appropriate to the context, the process of subdividing or resubdividing. To subdivide means the division of a parcel of land by the owner thereof into lots for the purpose of transfer of ownership or building development and shall specifically include the division of a lot or parcel of land by an owner in order to create within, on, or through that lot or parcel of land a street meeting the specifications of the Subdivision Ordinance of Newport News, Virginia, to be dedicated to the public (chapter 35; and, generally the same in appendix B except the term also encompasses the act of subdividing or resubdividing).

Surface treatment. One (1) application of prime coat and aggregate cover material and one (1) application of seal coat and aggregate cover material (chapter 33.02).

Tidal shore. The area of land between mean low water level and mean high water level (chapter 37.1).

Tidal wetlands. Vegetated and nonvegetated wetlands as defined in Section 62.1-13.2 of the Code of Virginia (chapter 37.1).
TPI. Truss Plate Institute, 583 D'Onofrio Drive, Suite 200, Madison WI 53719; (608) 833-5900, fax (608) 833-4360.

Transmission lines. Those high-capacity conductors (such as 115KV and above for electrical service) and associated structures which are used to carry the service from points of generation to distribution points (such as electrical substations) (chapter 40.1).

Tree. Unless the context in which the word is used indicates otherwise, a tree is any living, self-supporting woody plant that usually produces one (1) main trunk (chapter 33.02).

Tree, height. The distance measured vertically above ground to the uppermost branch joining the main stem(s) or trunk (chapter 33.02).

Tree, multi-stem. A tree having several stems emanating from the root mass or root crown (chapter 33.02).

Tree, single-stem. A tree with one (1) main central stem or trunk emanating from the root mass or root crown (chapter 33.02).

Tributary stream. Any perennial stream depicted as such on the U.S. Geological Survey 7½ minute topographic quadrangle map photo revised in 1986 (scale 1:24,000) (chapter 37.1).

Trunk line. A sewer line that receives sewage flow from one or more main line sewers.

UL. Underwriters Laboratories, Inc., 333 Pfingsten Road, Northbrook IL 60062; (708) 272-8800.

Undeveloped property. Any parcel that has not been altered from its natural state in such a manner that the topography or soils on the property have been disturbed or altered to the extent that the rate of surface infiltration of stormwater has been affected (chapter 37.1).

VDOT. Virginia Department of Transportation, Suffolk District, 1700 North Main Street, Suffolk VA 23434; (757) 925-2500 (switchboard), fax (757) 925-2532.

VUSBC. Virginia Uniform Statewide Building Code.

Vegetated wetlands. Lands lying between and contiguous to mean low water and an elevation above mean low water equal to the factor one and one-half (1.5) times the mean tide range at the site of the proposed project in the city, and upon which is growing any of the following species: saltmarsh cordgrass (Spartina alterniflora), saltmeadow hay (Spartina patens), saltgrass (Distichlis spicata), black needlerush (Juncus roemerianus), saltwort (Salicornia spp.), sea lavender (Limonium spp.), marsh elder (Iva frutescens), groundsel bush (Baccharis halimifolia), wax myrtle (Myrcia sp.), sea oxeye (Borrichia frutescens), arrow arum (Peltandra virginica), pickerelweed (Pontederia cordata), big cordgrass (Spartina cynosuroides), rice cutgrass (Leersia oryzoides), wildrice (Zizania aquatica), bulrush (Scirpus validus), spikerush (Eleocharis sp.), sea rocket (Cakile edentula), southern wildrice (Zizaniopsis miliacea), cattail (Typha spp.), three-square (Scirpus spp.), buttonbush (Cephalanthus occidentalis), bald cypress (Taxodium distichum), black gum (Nyssa sylvatica), tupelo (Nyssa aquatica), dock (Rumex spp.), yellow pond lily (Nuphar sp.), marsh fleabane (Pluchea purpurascens), royal fern (Osmunda regalis), marsh hibiscus (Hibiscus moscheutos), beggar's tick (Bidens sp.), smartweed (Polygonum sp.),

arrowhead (Sagittaria spp.), sweet flag (Acorus calamus), water hemp (Amaranthus cannabinus), reed grass (Phragmites communis), or switch grass (Panicum virgatum) (chapter 44).

Vehicular use area. The parking area of a parking lot or parking garage, along with parking accessways, fire lanes and loading/unloading areas, but not including private streets (chapter 33.02).

Water-dependent facility. A development of land that cannot exist outside the resource protection area and must be located on the shoreline by reason of the intrinsic nature of its operation (chapter 37.1). Designers are referred to the definition in the ***Newport News City Code***, section 37.1-48, for a list of facilities that are identified as water-dependent.

Watershed. Region or area contributing to the supply of a stream or lake; drainage area, drainage basin, catchment area.

Wetlands. Any tidal or nontidal wetlands (chapter 37.1). Both vegetated and non-vegetated wetlands (chapter 44).

Wetlands board or board. The Newport News Wetlands Board (chapter 44).

Wet well. The below-grade structure of a pump station into which sewage flows and from which the sewage is pumped.

Wheel stop. A limiting device that is anchored to a paved area to prevent vehicle wheels from being advanced (chapter 33.02).

References

Editor's Note: The text, figures and plates in this manual refer designers to other publications generally (an entire book may be cited) and specifically (a publication number and page may be cited). Therefore, it was deemed unnecessary to list specific references in this section. As an example, a listing of the *Road and Bridge Standards* published by the Virginia Department of Transportation is intended to include all specific references (such as a criteria plate for guardrail) to the publication as found in this manual. On the other hand, although the *Newport News City Code* generally applies to this manual, several individual chapters of the *Code* are listed under that entry merely as an aid to designers. Because this manual will be used by administrators and managers as well as by technical people, the entries generally follow bibliography style guidelines in *The American Heritage Dictionary* (Berube, Margery S., *et al*. 2nd ed. Boston: Houghton Mifflin Company, 1985. p. 63).

A Current Assessment of Urban Best Management Practices. Metropolitan Washington Council of Governments (MWCOG). Washington, D.C., March 1992.

A Framework for Evaluating Compliance with the 10% Rule in the Chesapeake Bay Critical Area. Prepared for the Maryland Critical Area Commission and the Maryland Department of the Environment. MWCOG. October 1987.

Americans with Disabilities Act (ADA), 36 CFR 1191, "Americans with Disabilities Act (ADA) Accessibility Guidelines for Buildings and Facilities; Final Guidelines." Washington, D.C., July 26, 1991.

"Analysis of Urban BMP Performance and Longevity in Prince George's County, Maryland" (Publication No. 92711). MWCOG. August 1992.

Best Management Practices Design Guidance Manual for Hampton Roads - Phase I: BMPs for Small Sites. Prepared by SDN Water Resources in cooperation with Hampton Roads Planning District Commission (HRPDC) staff. Chesapeake, Va., December 1991 (a).

Best Management Practices Design Guidance Manual for Hampton Roads - Phase II: Detention/Retention Facilities. Prepared by URS Consultants, Inc. in cooperation with HRPDC staff, Chesapeake, Va., December 1991 (b).

"Biofiltration Swale Performance, Recommendations, and Design Considerations" (Publication 657). Metropolitan Seattle Water Pollution Control Department. Seattle, October 1992.

Chesapeake Bay Local Assistance Manual: A Guide for the Development of Local Programs in Order to Comply with the Chesapeake Bay Preservation Act (Appendix C, "Guidance Calculation Procedure"). Chesapeake Bay Local Assistance Department (CBLAD). Richmond, Va., November 1989.

Code of Federal Regulations, particularly those sections referenced in this manual. U.S. Government Printing Office: Washington, D.C., latest editions.

"Consolidated Design Guidelines for Structural BMP's." A report prepared for the Department of Engineering, City of Newport News. Camp Dresser & McKee (CDM). Annandale, Va., June 1994.

"Controlling Urban Runoff: A Practical Manual for Planning and Designing Urban BMPs" (Publication No. 87703). MWCOG. July 1987.

Design and Construction of Urban Stormwater Management Systems. The Urban Water Resources Research Council of the American Society of Civil Engineers (ASCE) and the Water Environment Federation (WEF). USA: (ASCE, New York; WEF, Alexandria, Va.), 1992.

"Design of Roadside Channels with Flexible Linings" (Hydraulic Engineering Circular No. 15). Federal Highway Administration (FHWA), U.S. Department of Transportation. Washington, D.C., April 1988.

"Design of Stormwater Wetlands Systems" (Publication No. 92710). MWCOG. October 1992.

Development of Consistent Stormwater Management Criteria. Prepared for the SJR 341 Committee. CBLAD (Virginia Department of Conservation and Recreation) and Virginia Department of Environmental Quality (VDEQ). Richmond, Va., Nov. 23, 1993.

Drainage Manual. Prepared by the Hydraulics Section, Location and Design Division, Virginia Department of Transportation (VDOT). Richmond, Va., January 1991 (reprint).

"Driveway Access Policy." Council of the City of Newport News Resolution No. 7681-94 (or latest adopted resolution).

Federal Specifications (FS), particularly those referenced in the manual. Washington, D.C. and other locations, latest editions.

Flexible Pavement Design Guide for Primary and Interstate Roads in Virginia. Materials Division (VDOT) and Virginia Transportation Research Council (VTRC). Richmond., Va., January 1995 (revision).

Framework for the Future. City of Newport News comprehensive planning document. 1993 (or latest edition).

Gray, Donald H. and Leiser, Andrew T. *Biotechnical Slope Protection and Erosion Control*. Van Nostrand Reinhold Co., Inc.: 1982.

Guidebook for Screening Urban Nonpoint Pollution Management Strategies. Northern Virginia Planning District (NVPDC). Falls Church, Va., November 1979.

Hampton Roads Sanitation District (HRSD) Regulations. Norfolk, Va., latest editions.

Hartigan, J. P., "Basis for Design of Wet Detention Basin BMPs." *Design of Urban Runoff Quality Controls*, Roesner, L. A., *et al* eds. ASCE. New York, 1989. pp. 122-144.

Hartigan, J. P., *et al*, "Retention, Detention, and Overland Flow for Pollutant Removal from Highway Stormwater Runoff: Vol. II--Design Guidelines." Report No. FHWA/RD-89-203. Prepared for the FHWA. McLean, Va., August 1989.

Inspector's Guidelines Manual for Infiltration Practices. Sediment and Stormwater Division, Water Resources Administration, Maryland Department of Natural Resources (DNR). Annapolis, Md., July 1985.

Interim Guide for Design of Pavement Structures. American Association of State Highway and Transportation Officials (AASHTO). Washington, D.C., 1972.

Listokum, David and Walker, Carole. *The Subdivision and Site Plan Handbook*. Rutgers University. 1989.

"Local Management of Wetlands" (Special Report #35). Virginia Institute of Marine Science. June 1973.

Manual on Uniform Traffic Control Devices (MUTCD). U.S. Department of Transportation, FWHA. 1988. (and) *The Virginia Supplement to the Manual on Uniform Traffic Control Devices for Streets & Highways*. VDOT. 1982 (or latest edition).

Metric in Construction. A newsletter published by the Construction Metrication Council of the National Institute of Building Sciences and distributed through the support of Sweet's Group, a division of the McGraw-Hill Companies. Washington, D.C., Volume 3, Issue 6, November-December 1994; and, Volume 5, Issue 2, March-April 1996.

Minimum Standards of Entrances to State Highways. Traffic Engineering Division, VDOT. 1989.

Newport News City Code generally, but specifically the following chapters and appendices:

2	Administration
13	Building Regulations
25	Mobile Home Parks
26	Motor Vehicles and Traffic
33	Sewers and Sewage Disposal
33.01	Signs
33.02	Site Regulations
35	Soil Removal and Other Land-Disturbing Activities
37.1	Stormwater Management
38	Streets and Sidewalks
40.1	Underground Installation of Lines and Pipes and their Related Facilities
42	Water Supply
44	Wetlands
45	Zoning Ordinance
Appendix B	Subdivision Regulations

Northern Virginia BMP Handbook: A Guide to Planning and Designing Best Management Practices in Northern Virginia. NVPDC and Engineers and Surveyors Institute (ESI). Annandale, Va., November 1992.

NPDES (National Pollutant Discharge Elimination System) Stormwater Permit Application: Part 2. City of Newport News. May 1993.

Pavement Design and Evaluation Section. VDOT. January 1995.

Pavement Design Guide for Subdivision and Secondary Roads in Virginia. Materials Division (VDOT) and VTRC. January 1996 (revision).

Planning/Design Procedures for Infiltration Practices. Sediment and Stormwater Division, Water Resources Administration, Maryland DNR. Annapolis, Md., May 1985.

"Proceedings of A Seminar on Urban Hydrology." U.S. Army Corps of Engineers. September 1970.

Reservoir Water Quality Protection Study: Phase 2 Report. Prepared for the Department of Public Utilities, City of Newport News. CDM. Annandale, Va., November 1985.

Road and Bridge Standards, Vol. 1 & 2. Metric ed. VDOT. 1994.

Roadside Design Guide. AASHTO. 1989.

SCS National Engineering Handbook, Section 3, "Sedimentation." Soil Conservation Service, U.S. Department of Agriculture. Washington, D.C., 1971.

Sewerage Regulations. Latest editions issued by:

- Virginia Department of Environmental Quality
- Virginia State Health Department
- Virginia State Water Control Board
- City of Newport News, including *Sewage Collection Management Program (SECOMP)* documents
- City of Newport News, Department of Public Works specifications

Standards of professional organizations, to include but not be limited to the following (see the ***Glossary*** section for addresses and telephone numbers):

- American Association of State Highway and Transportation Officials (AASHTO)
- American Institute of Steel Construction (AISC)
- American National Standards Institute (ANSI)
- American Society of Heating, Refrigerating and Air-Conditioning Engineers (ASHRAE)
- American Society for Testing and Materials (ASTM)
- Architectural Woodwork Institute (AWI)
- Asphalt Institute (AI)
- National Electrical Code (from NFPA)
- National Electrical Manufacturers Association (NEMA)
- National Fire Protection Association (NFPA)
- Steel Door Institute (S.D.I.)
- Sheet Metal and Air Conditioning Contractors National Association (SMACNA)
- Truss Plate Institute (TPI)
- Underwriters Laboratories, Incorporated (UL)

Standard Specifications. City of Newport News. Aug. 1, 1983.

Thickness Design - Asphalt Pavements for Highways & Streets (Manual Series No. 1 (MS1)). AI. February 1991.

Urban Storm Drainage Criteria Manual: Volume 3 - Best Management Practices. Urban Drainage and Flood Control District. Denver, September 1992.

Utility Locating Conceptual Drawings. Published by the Standardization Committee, a joint venture of the HRPDC and the Hampton Roads Utility & Heavy Contractors Association. Chesapeake, Va., 1994.

Virginia Erosion and Sediment Control Handbook. 3rd ed. Division of Soil and Water Conservation, Department of Conservation and Recreation. Richmond, Va., Nov. 23, 1993.

Virginia Uniform Statewide Building Code (VUSBC),Volume 1. Division of Building Regulation, Department of Housing and Community Development. Richmond, Va., 1994.

Virginia Work Area Protection Manual -- Standards and Guidelines. VDOT. 1996.

Washington Metropolitan Area Urban Runoff Demonstration Project. NVPDC. Annandale, Va., April 1983.

Waterworks Regulations, Specifications, and Criteria published by
- State of Virginia
- Department of Public Utilities (Waterworks), City of Newport News. Latest editions.

Wetlands: Mitigating and Regulating Development Impacts. The Urban Land Institute. August 1990.